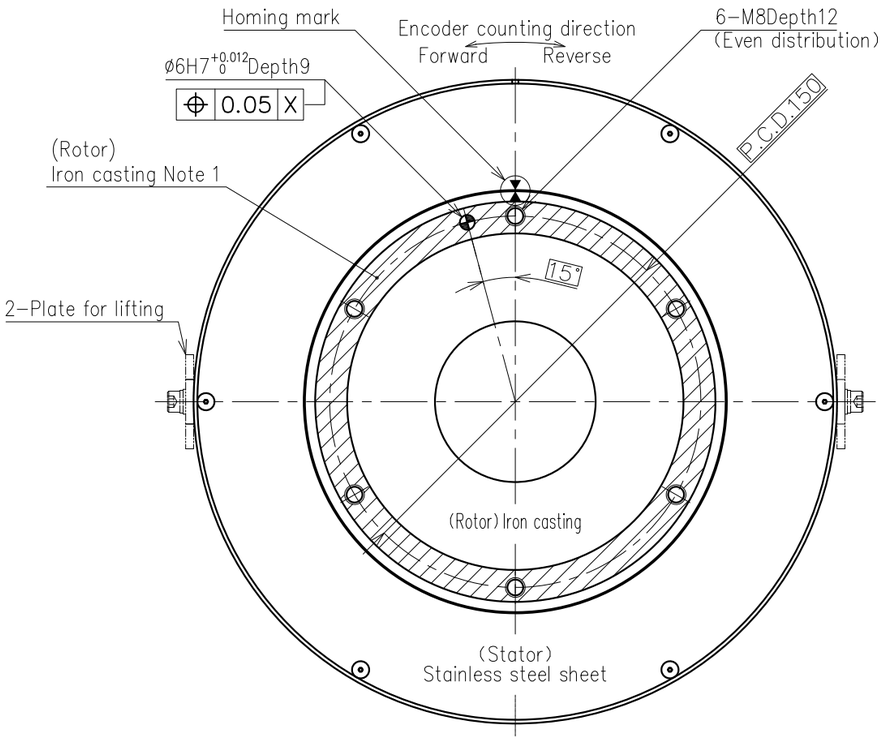

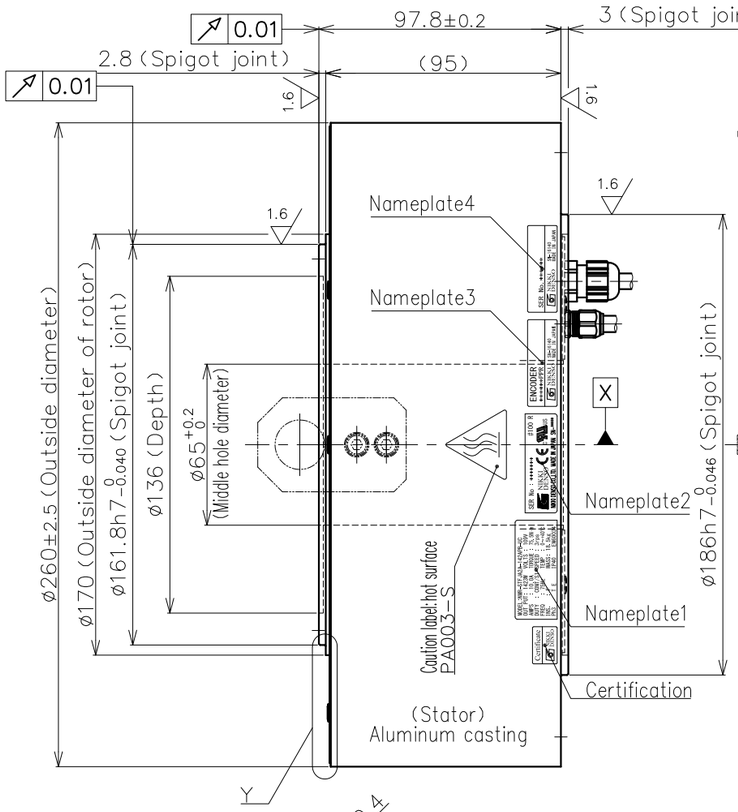

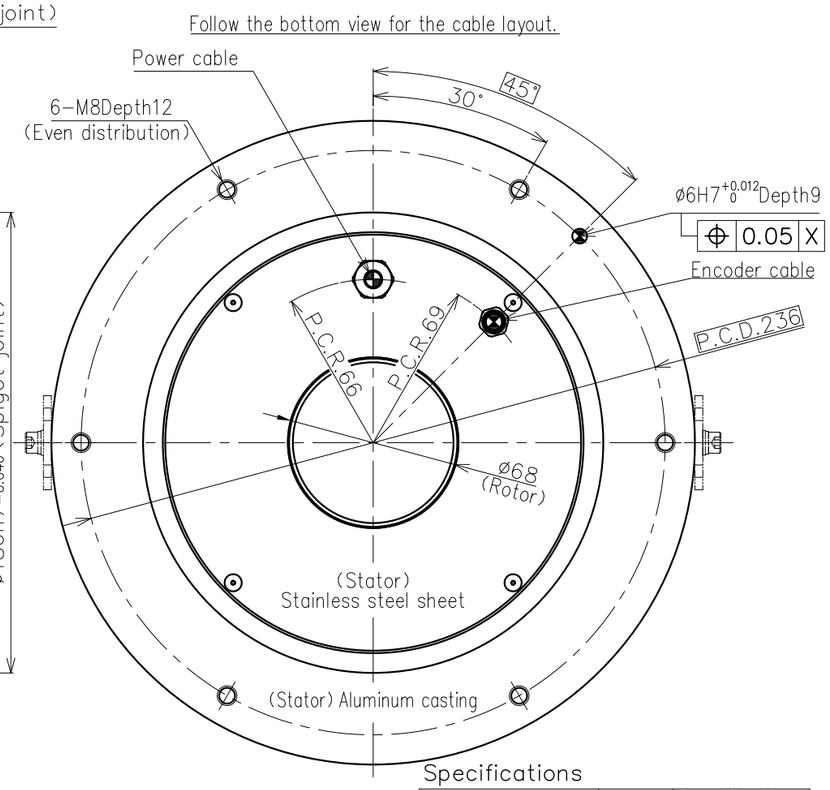

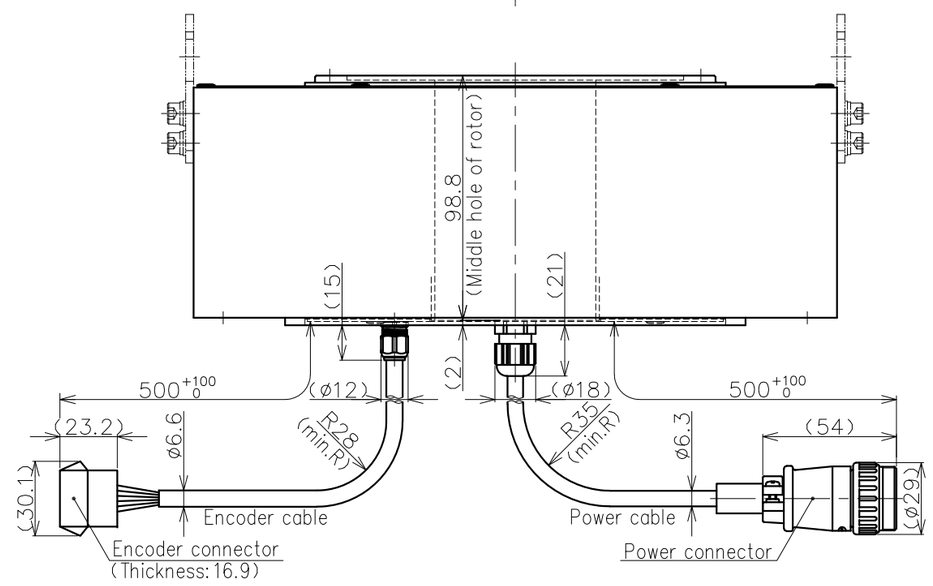

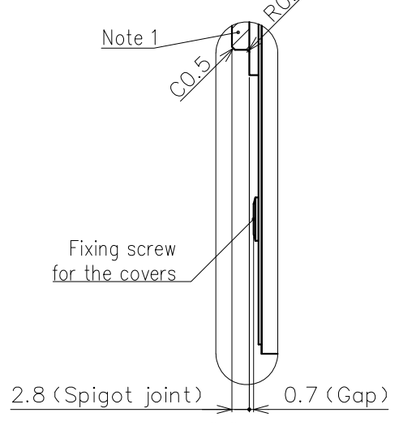

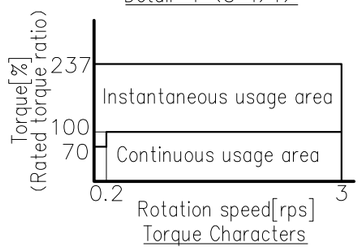

Torque Characters

Nameplate list	
Index	Details
Nameplate 1	UL Motor serial No.1
Nameplate 2	UL Motor serial No.2
Nameplate 3	Encoder type. Resulution
Nameplate 4	Encoder software

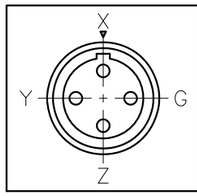

Power connector pin assignment

Pin	Signal	Line color
1	U	Black
2	V	Black
3	W	Black
4	Ground	Green/Yellow

NANABOSHI ELECTERIC Mfg, Co., Ltd
NET-244-AdM

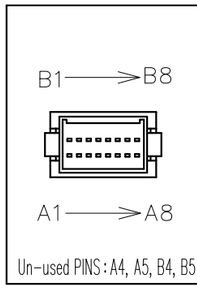

Un-used PINS : A4, A5, B4, B5

Encoder connector pin assignment

Pin	Signal	Pin	Signal	
A1	+5V	A5	N.C.	
B1	GND	B5	N.C.	
A2	+5V	A6	Reserved	Note 3
B2	GND	B6	Reserved	Note 3
A3	SD1	A7	Reserved	Note 3
B3	SD1*	B7	Reserved	Note 3
A4	N.C.	A8	FG	
B4	N.C.	B8	FG	

Housing : J21DPM-16V-KY (JST)
Contact : SJ2M-002GF-M1.0N (JST)

Specifications

Items	Unit	Specifications
Rated torque	N·m	75.5
Max. torque	N·m	179
Rated current	A	10
Rated rotation speed	rps	3
Rated output	W	1,423
Encoder type	Optical absolute (single-turn)	
The signal output	Serial communication	
Interpolation unit	Built-in motor	
Detection pulse	ppr	6,815,744
Electrical detection resolution	arc second	0.191
Allowable moment load	N·m	244 ◆
Allowable axial load	N	12,900 ◆
Radial runout (No load)	mm	0.01
Axial runout (No load)	mm	0.01
Rotor moment of intertia	kg·m²	0.039
Mass	kg	18.5
Magnetic pole detection	Absolute position detection	
Power source	ACV	3-phase 200V
Paired servo driver	1.5KW (VC-II) , 1.6KW (VPS)	
Duty type	—	Continuous (S1) ☆
Mounting attitude	—	Horizontal (Rotor facing upward)
Protection class	IP	40
Operating temperature	℃	0~40
Humidity (Non-condensing)	%	0~85
Vibration resistance	G	1
Withstand voltage	AC 1500V for 1 min. only	
Insulation resistance	Ω	100M or higher

◆ The life of bearing and runout accuracy are different by load condition.
☆ Please make sure to consult with us if the mounting is other than horizontal attitude.

Note

1.The spigot joint surface of rotation part (both axial and radial) are coated by the transparent color coating agent for the rust prevention under the environment of no condensation.Make sure to use the dry cloth when you clean up the spigot joint surface of rotation part.Never use the organic solvent such as acetone or ethanol since these solvent destroys the coating agent and will cause the rusting.

2.Allowable axial load and allowable moment load indicated in the spec. sheet are the maximum allowable load when each load is independently activated. Please make sure to consult us in case of combined load at the axial load, radial load, and moment load to be activated, or life of the motor.

3.Please do not wire the pin (A6~B7) which is reserved for encoder manufacturer to avoid the encoder troubles.

4.Special model motor, please refer to the special model drawing.

REV. MARK ENTRY No.	REV. NOTE	APPROVED DATE	CHECKED DATE	DESIGNED DATE
△				
△				

NOTE File name/SE-84180A.dwg

APPROVED	CHECKED	DESIGNED

NIKKI DENSO CKD NIKKI DENSO CO., LTD

ENTRY No. R1-72176
FINISH —
MATERIAL Refer drawing
SCALE 1/2.5
third angle projection

PRODUCT No. 248-2711
MODEL τDISC Motor ND250-95-LSPB-UC (ABS) NMR-STFJA2A-142APB-UC
TITLE Dimensions (ABS High precision)
DRAWING No. SE-84180 REV. A