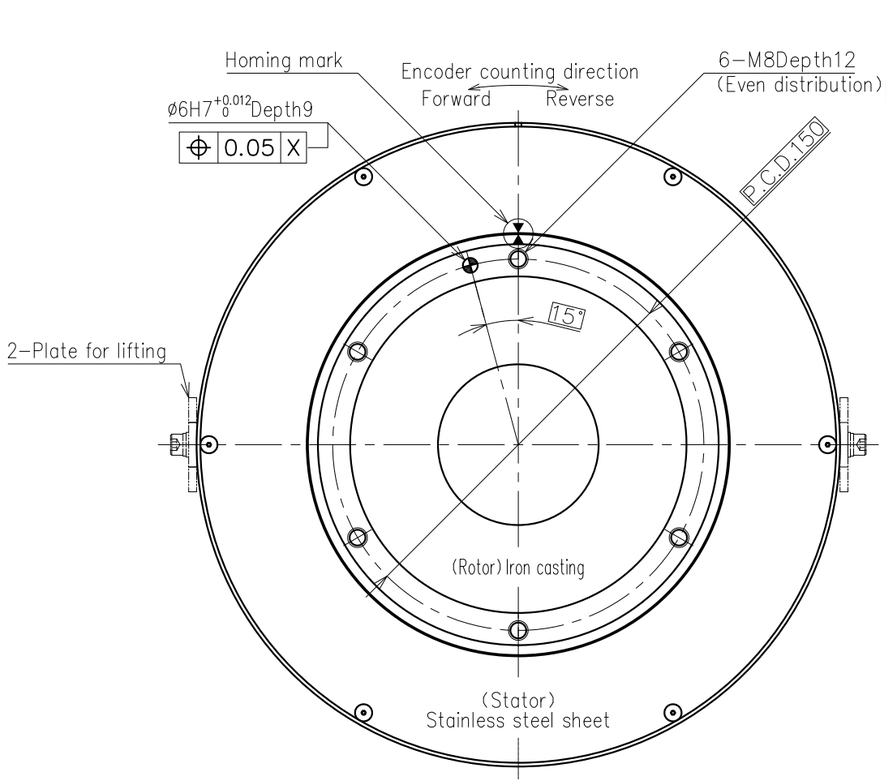

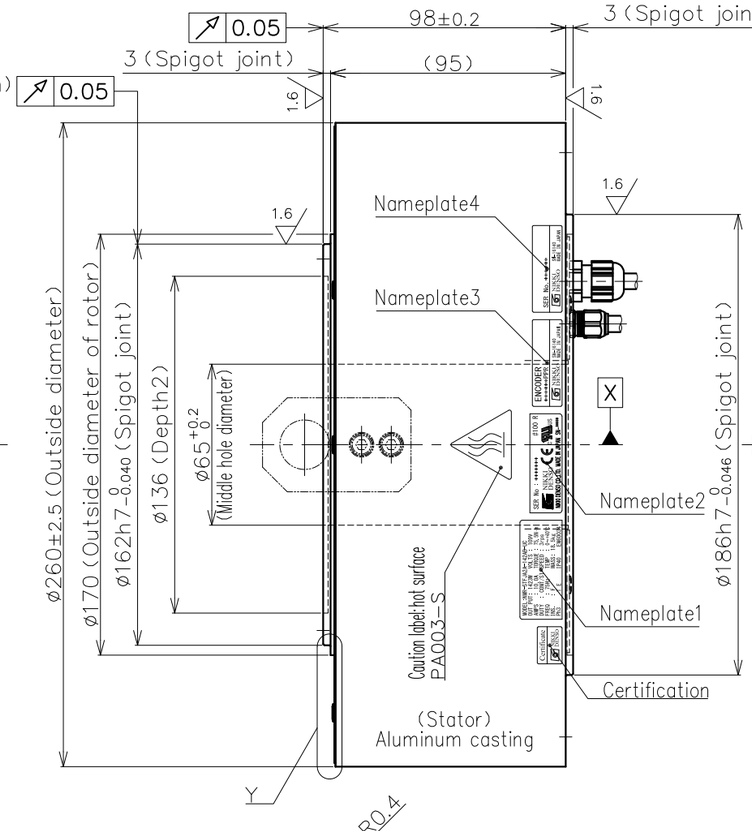

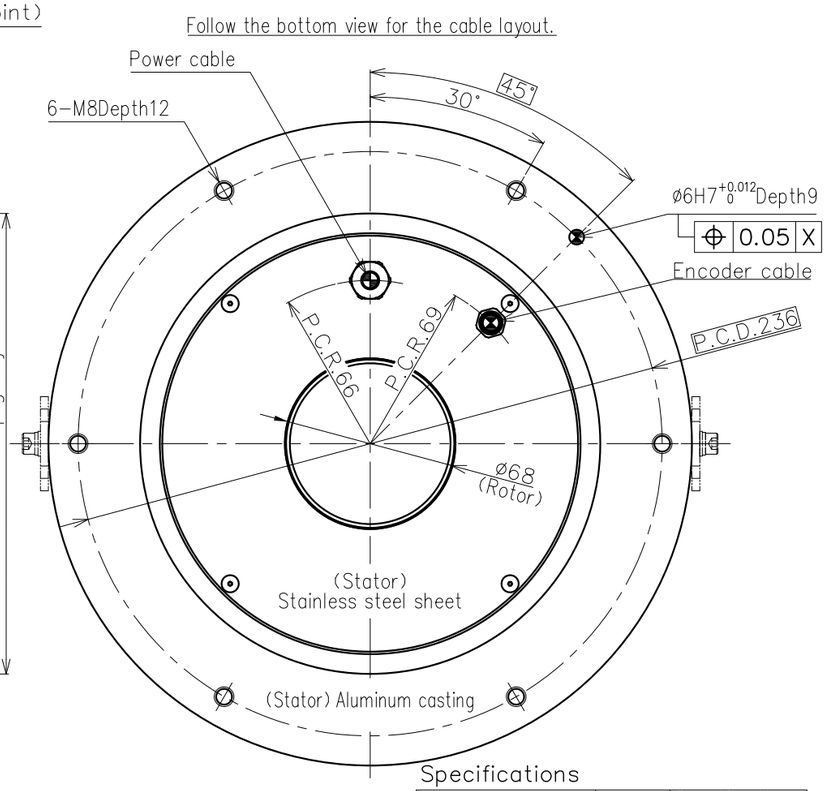

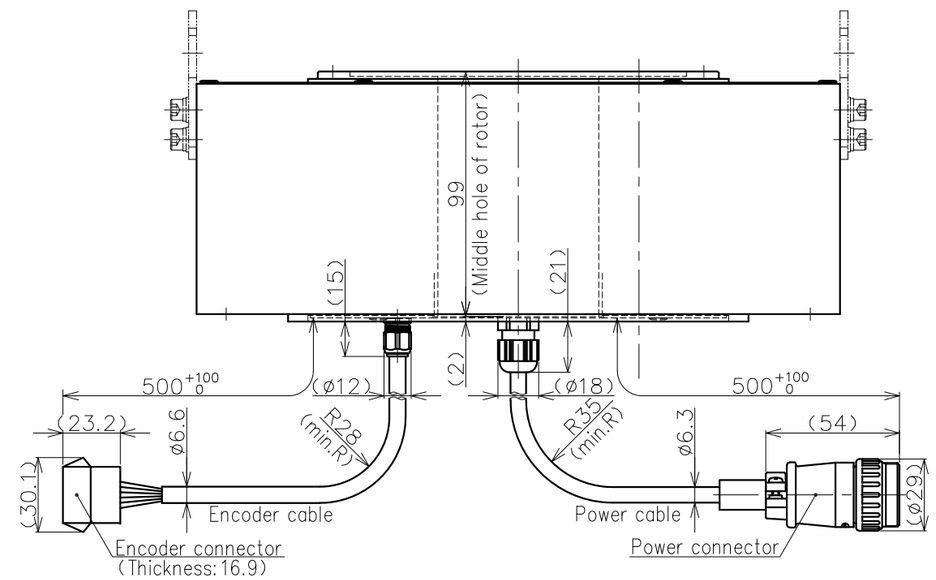

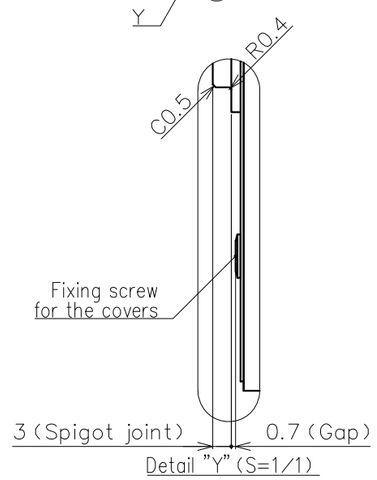

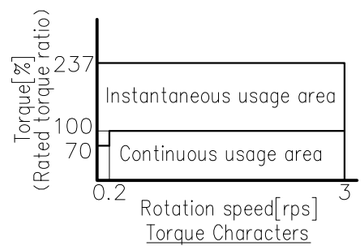

Torque Characters

Nameplate list	
Index	Details
Nameplate 1	UL Motor serial No.1
Nameplate 2	UL Motor serial No.2
Nameplate 3	Encoder type. Resulution
Nameplate 4	Encoder software

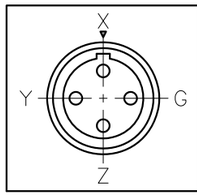

Power connector pin assignment		
Pin	Signal	Line color
1	U	Black
2	V	Black
3	W	Black
4	Ground	Green/Yellow
NANABOSHI ELECTERIC Mfg, Co., Ltd NET-244-AdM		

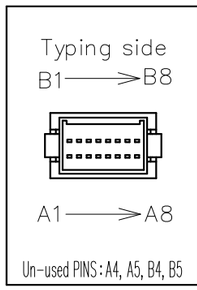

Encoder connector pin assignment				
Pin	Signal	Pin	Signal	
A1	+5V	A5	N.C.	
B1	GND	B5	N.C.	
A2	+5V	A6	Reserved	Note 2
B2	GND	B6	Reserved	Note 2
A3	SD1	A7	Reserved	Note 2
B3	SD1*	B7	Reserved	Note 2
A4	N.C.	A8	FG	
B4	N.C.	B8	FG	
Housing: J21DPM-16V-KY (JST)				
Contact: SJ2M-002GF-M1.0N (JST)				

Specifications

Items	Unit	Specifications	
Rated torque	N·m	75.5	
Max. torque	N·m	179	
Rated current	A	10	
Rated rotation speed	rps	3	
Rated output	W	1,423	
Encoder type	Optical absolute (single-turn)		
The signal output	Serial communication		
Interpolation unit	Built-in motor		
Detection pulse	ppr	6,815,744	
Electrical detection resolution	arc second	0.191	
Allowable moment load	N·m	244	◆
Allowable axial load	N	12,900	◆
Radial runout (No load)	mm	0.05	
Axial runout (No load)	mm	0.05	
Rotor moment of intertia	kg·m²	0.039	
Mass	kg	18.5	
Magnetic pole detection	Absolute position detection		
Power source	ACV	3-phase 200V	
Paired servo driver	1.5KW (VC-II)、1.6KW (VPS)		
Duty type	—	Continuous (S1)	☆
Mounting attitude	—	Horizontal (Rotor facing upward)	
Protection class	IP	40	
Operating temperature	℃	0~40	
Humidity (Non-condensing)	%	0~85	
Vibration resistance	G	1	
Withstand voltage	AC 1500V for 1 min. only		
Insulation resistance	Ω	100M or higher	

◆ The life of bearing and runout accuracy are different by load condition.
☆ Please make sure to consult with us if the mounting is other than horizontal attitude.

Note
1.Allowable axial load and allowable moment load indicated in the spec. sheet are the maximum allowable load when each load is independently activated. Please make sure to consult us in case of combined load at the axial load, radial load, and moment load to be activated, or life of the motor.
2.Please do not wire the pin (A6~B7) which is reserved for encoder manufacturer to avoid the encoder troubles.
3.Special model motor, please refer to the special model drawing.

REV. MARK	REV. NOTE	APPROVED DATE	CHECKED DATE	DESIGNED DATE
ENTRY No.				

NOTE File name/SE-84170A.dwg

APPROVED	CHECKED	DESIGNED

NIKKI DENSO CKD NIKKI DENSO CO., LTD

ENTRY No. R1-72176
FINISH —
MATERIAL Refer drawing
SCALE 1/2.5
third angle projection

PRODUCT No. 248-2701
MODEL τDISC Motor ND250-95-LSB-UC (ABS) NMR-STFJA2A-142AB-UC
TITLE Dimensions (ABS)
DRAWING No. SE-84170
REV. A