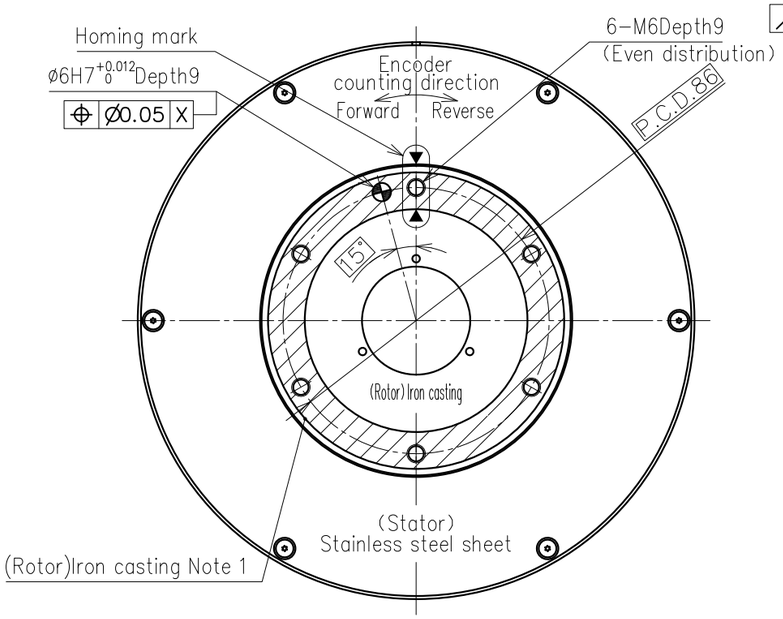


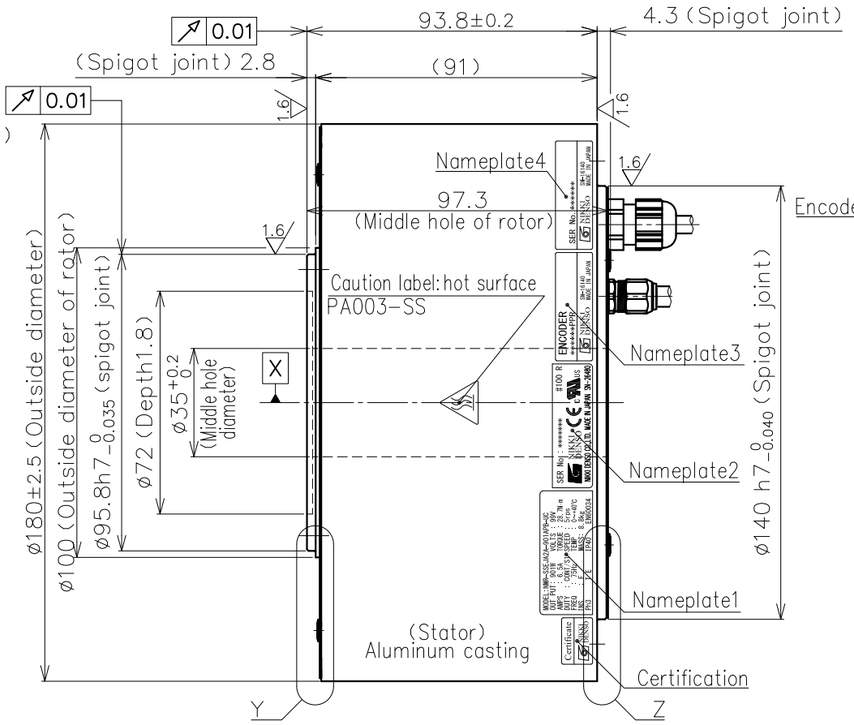


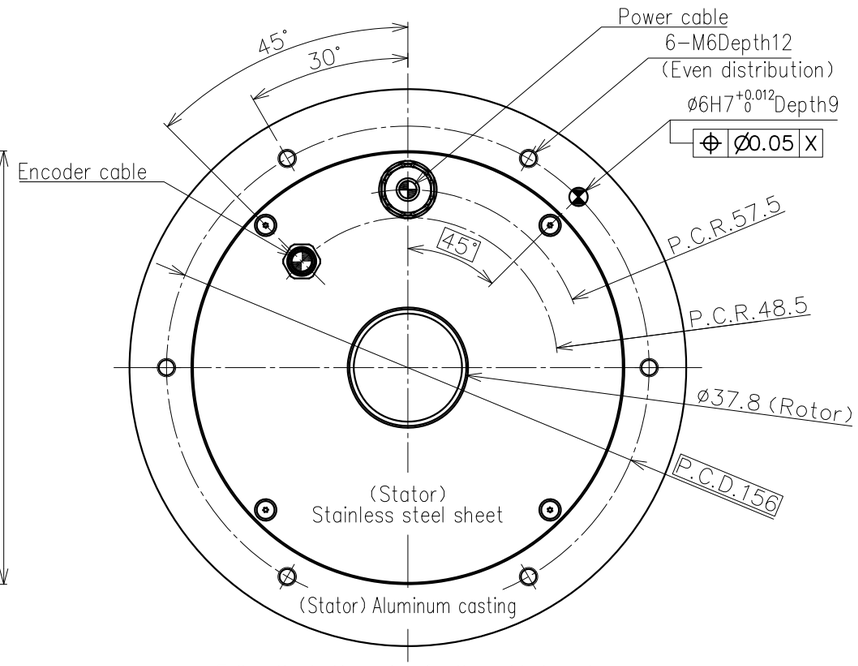


Follow the bottom view for the cable layout.

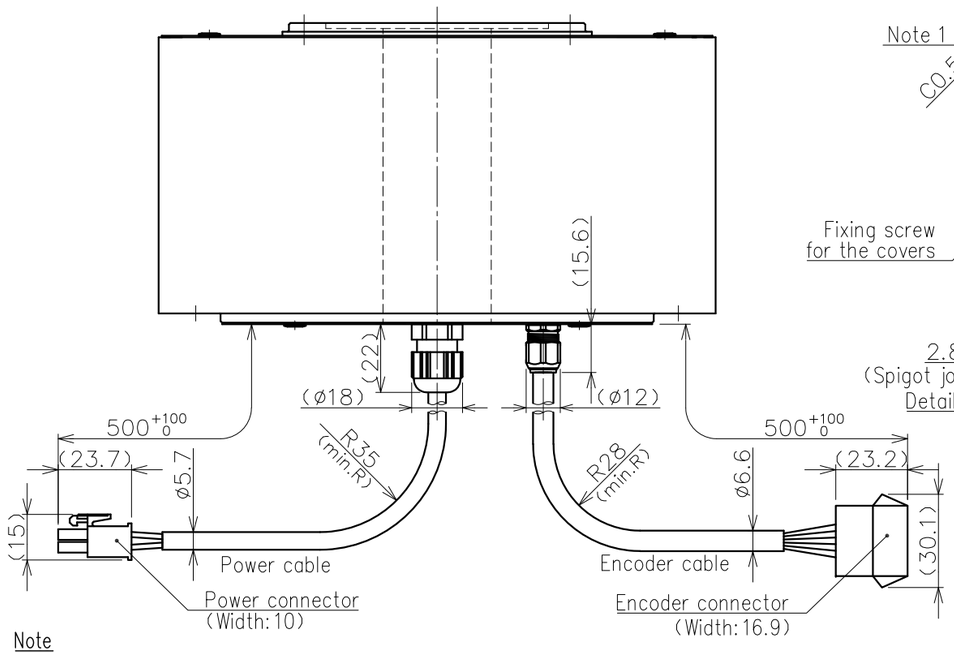


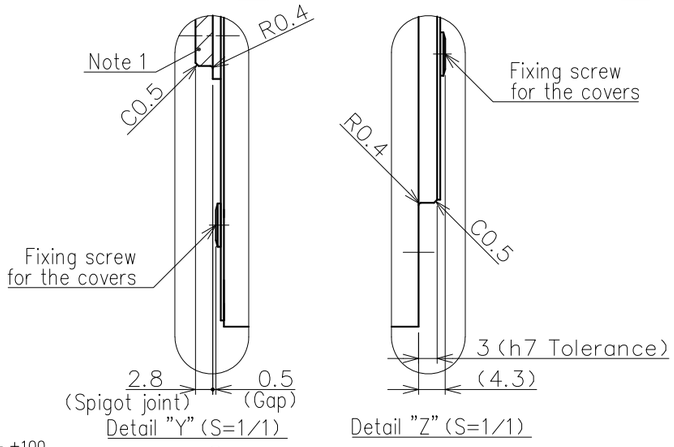


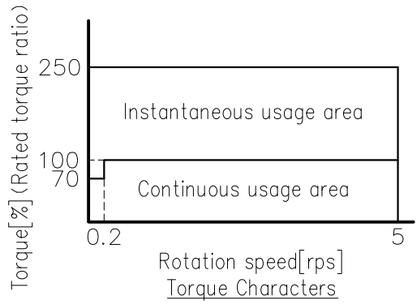


Torque Characters

| Nameplate list | |
|---|---|
| Index | Details |
| Nameplate 1 | UL Motor serial No.1 |
| Nameplate 2 | UL Motor serial No.2 |
| Nameplate 3 | Encoder type. Resolution |
| Nameplate 4 | Encoder software |

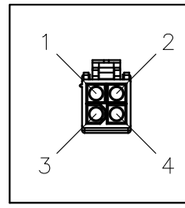


| Power connector pin assignment | | |
|---|---|---|
| Pin | Signal | Line color |
| 1 | U | Black |
| 2 | V | Black |
| 3 | W | Black |
| 4 | Ground | Green/Yellow |
| Housing : 172167-1 (TEJ) | | |
| Contact : 170364-1 (TEJ) | | |

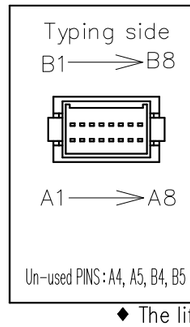


Un-used PINS: A4, A5, B4, B5

| Encoder connector pin assignment | | | | |
|---|---|---|---|---|
| Pin | Signal | Pin | Signal | |
| A1 | +5V | A5 | N.C. | |
| B1 | GND | B5 | N.C. | |
| A2 | +5V | A6 | Reserved | Note 3 |
| B2 | GND | B6 | Reserved | Note 3 |
| A3 | SD1 | A7 | Reserved | Note 3 |
| B3 | SD1* | B7 | Reserved | Note 3 |
| A4 | N.C. | A8 | FG | |
| B4 | N.C. | B8 | FG | |
| Housing : J21DPM-16V-KY (JST) | | | | |
| Contact : SJ2M-002GF-M1.0N (JST) | | | | |

Specifications

| Items | Unit | Specifications |
|---|---|---|
| Rated torque | N·m | 28.7 |
| Max. torque | N·m | 71.7 |
| Rated current | A | 6.5 |
| Rated rotation speed | rps | 5 |
| Rated output | W | 901 |
| Encoder type | Optical absolute (single-turn) | |
| The signal output | Serial communication | |
| Interpolation unit | Built-in motor | |
| Detection pulse | ppr | 2,097,152 |
| Electrical detection resolution | arc second | 0.618 |
| Allowable moment load | N·m | 27.3 ◆ |
| Allowable axial load | N | 2,900 ◆ |
| Radial runout (No load) | mm | 0.01 |
| Axial runout (No load) | mm | 0.01 |
| Rotor moment of intertia | kg·m² | 0.0053 |
| Mass | kg | 8.8 |
| Magnetic pole detection | Absolute position detection | |
| Power source | ACV | 3-phase 200V |
| Paired servo driver | 800W | |
| Duty type | – | Continuous (S1) |
| Mounting attitude | – | Horizontal (Rotor facing upward) ☆ |
| Protection class | IP | 40 |
| Operating temperature | ℃ | 0~40 |
| Humidity (Non-condensing) | % | 0~85 |
| Vibration resistance | G | 1 |
| Withstand voltage | AC 1500V for 1 min. only | |
| Insulation resistance | Ω | 100M or higher |

◆ The life of bearing and runout accuracy are different by load condition.
☆ Please make sure to consult with us if the mounting is other than horizontal attitude.

Note

1. The spigot joint surface of rotation part (both axial and radial) are coated by the transparent color coating agent for the rust prevention under the environment of no condensation. Make sure to use the dry cloth when you clean up the spigot joint surface of rotation part. Never use the organic solvent such as acetone or ethanol since these solvent destroys the coating agent and will cause the rusting.
2. Allowable axial load and allowable moment load indicated in the spec. sheet are the maximum allowable load when each load is independently activated. Please make sure to consult us in case of combined load at the axial load, radial load, and moment load to be activated, or life of the motor.
3. Please do not wire the pin (A6~B7) which is reserved for encoder manufacturer to avoid the encoder troubles.
4. Special model motor, please refer to the special model drawing.

| REV. MARK | REV. NOTE | APPROVED DATE | CHECKED DATE | DESIGNED DATE |
|---|---|---|---|---|
| ENTRY No. | | | | |

NOTE File name/SE-84120A.dwg

| APPROVED | CHECKED | DESIGNED |
|---|---|---|
| | | |

NIKKI DENSO CKD NIKKI DENSO CO., LTD

ENTRY No. R1-7217 6

FINISH —

MATERIAL Refer drawing

SCALE 1/2

third angle projection

PRODUCT No. 248-2591

MODEL τDISC Motor ND180-95-LSPB-UC (ABS) NMR-SSEJA2A-901APB-UC

TITLE Dimensions (ABS High precision)

DRAWING No. SE-84120 REV. A