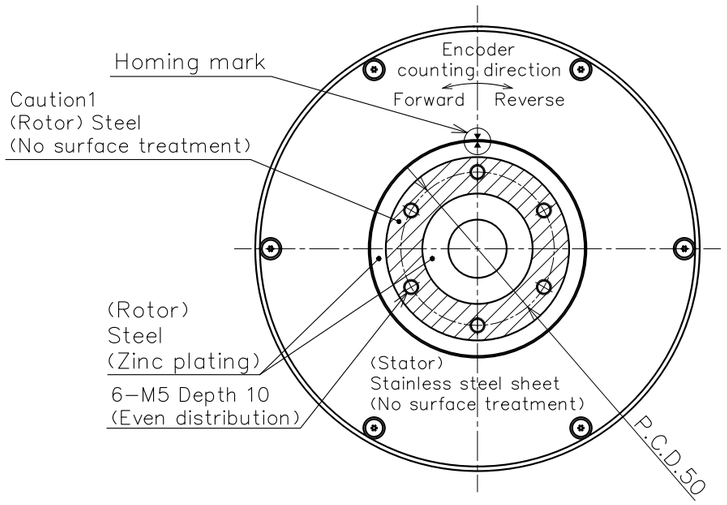

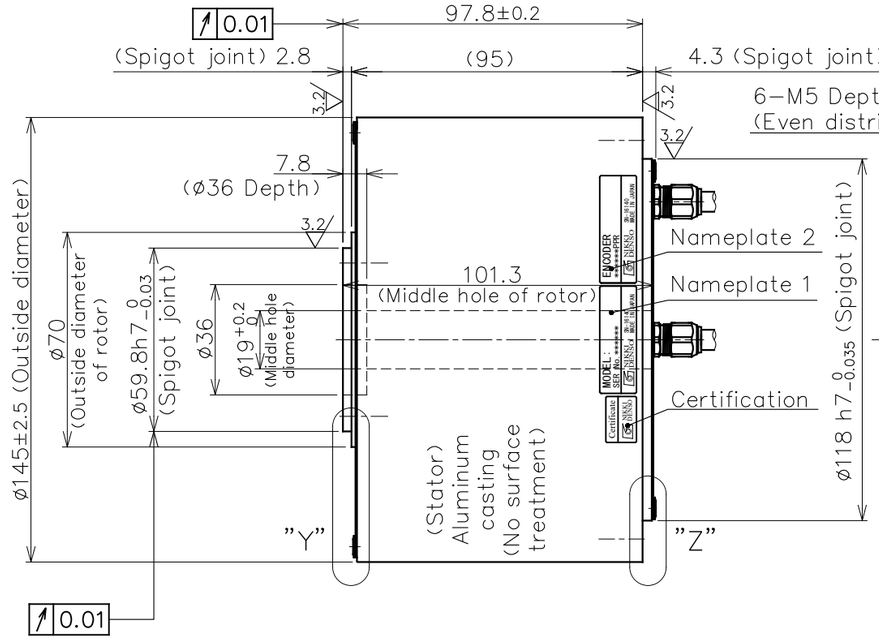

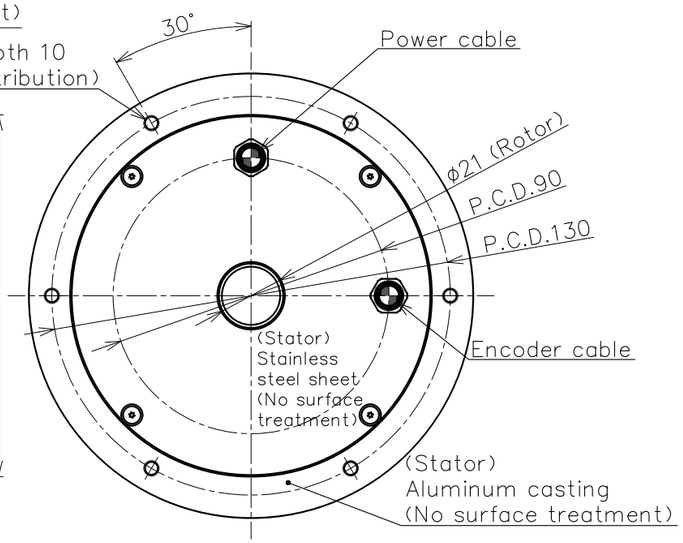

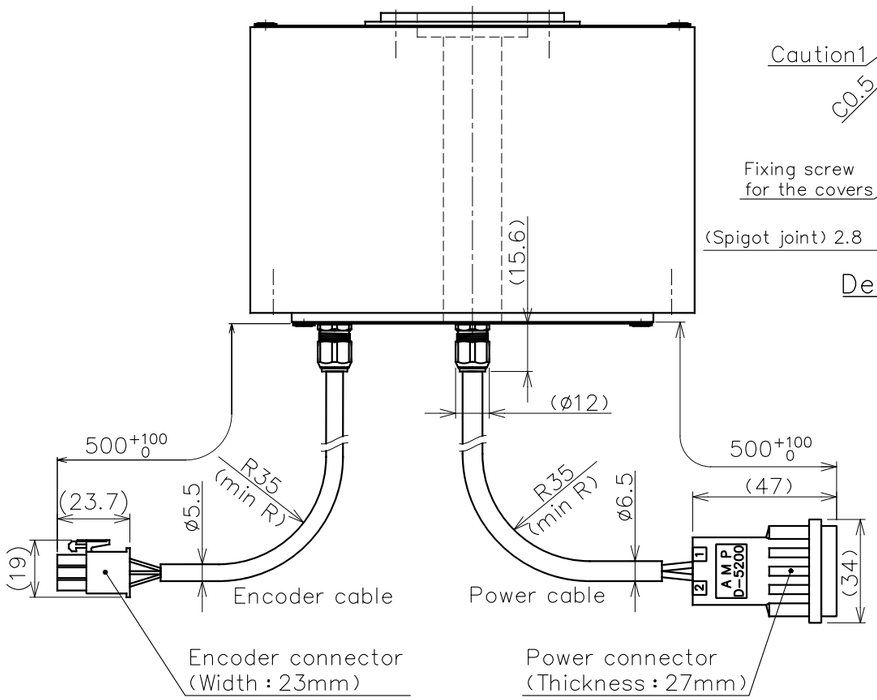

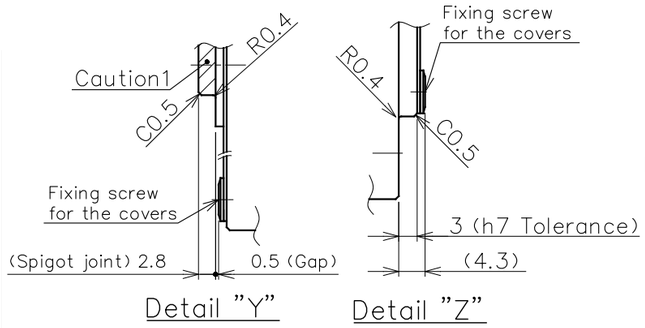

Nameplate list

Index	Details
Nameplate 1	Motor serial No.
Nameplate 2	Encoder type, Resolution

Power connector pin assignment

Pin	Phase	Line color
1	U	Red
2	V	White
3	W	Black
4	Ground	Green

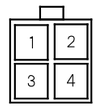

Power connector
Housing
172167−1 (TE)
Pin
170364−1 (TE)

Encoder connector pin assignment

Pin	Signal	Line color
1	A	Yellow/Red1
2	A*	Yellow/Black1
3	B	White/Red1
4	B*	White/Black1
5	Z	Gray/Red1
6	Z*	Gray/Black1
7	PS	Orange/Red1
8	PS*	Orange/Black1
9	PC	Gray/Red2
10	PC*	Gray/Black2
11	+5V	Pink/Red1
12	GND	Pink/Black1
13	+5V	Orange/Red2
14	GND	Orange/Black2
15	FG	Outer shield

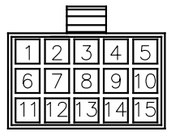

Encoder connector
Housing
172171−1 (TE)
Contact
170363−1 (TE)

Specifications

Items	Unit	Specifications
Rated torque	N·m	15.0
Max torque	N·m	37.0
Rated current	A	8.1
Rated rotation speed	rps	11
Rated output	W	1,036
Encoder type	Optical incremental	
The signal output	Pulse out put of A phase and B phase	
Interpolation unit	Built−in motor	
Detection pulse	ppr	1,600,000
Electrical detection resolution	arc second	0.810
Allowable moment load	N·m	17.3 ♦
Allowable axial load	N	2,400 ♦
Radial runout (No load)	mm	0.01
Axial runout (No load)	mm	0.01
Rotor moment of inertia	kg·m²	0.00134
Mass	kg	5.9
Magnetic pole detection	※	
Power Source	ACV	3−phase 200V AC
Paired servo driver	VCII,VPH−1.5kW or VPS−1.6kW	
Duty type	−	Continuous (S1)
Mounting attitude	Horizental	(Rotor facing upward) ☆
Protection class	IP	42
Operating temperature	℃	0~40
Humidity (Non−condensing)	%	0~85
Vibration resistance	G	1
Withstand voltage	AC 1500V for 1 min only	
Insulation resistance	Ω	100M or higher

※Selection of Magnetic pole detection or Automatic pole detection
♦ The life of bearing and runout accuracy are different by load condition.
☆ Please make sure to consult with us if the mounting is other than horizontal attitude.

Caution
1.No surface treatment on the hatching area of rotating position (top surface and spigot joint)
Please remove the anticorrosive coating before using the motor.
2.Allowable axial load and allowable moment load indicated in the spec. sheet are the maximum allowable load when each load is independently activated.
Please make sure to consult us in case of combined load at the axial load, radial load, and moment load to be activated, or life of the motor.

Rev. mark Entry No.	Rev. note	Approved Date	Checked Date	Designed Date

NOTE File name : SE−79190.dwg

Approved	Checked	Designed

NIKKI DENSO CKD NIKKI DENSO CO., LTD

Entry no. R1−7176,2
Surface treatment: Refer drawing
Material: Refer drawing
Scale: 1/2
Third angle projection

Product no. 247−8831
Model: DISC motor ND140−95−LSP−HS (INC) NMR−SRFIA2A−102AP
Title: Dimensions (INC_11rps) _High precision
Drawing No. SE−79190
REV.