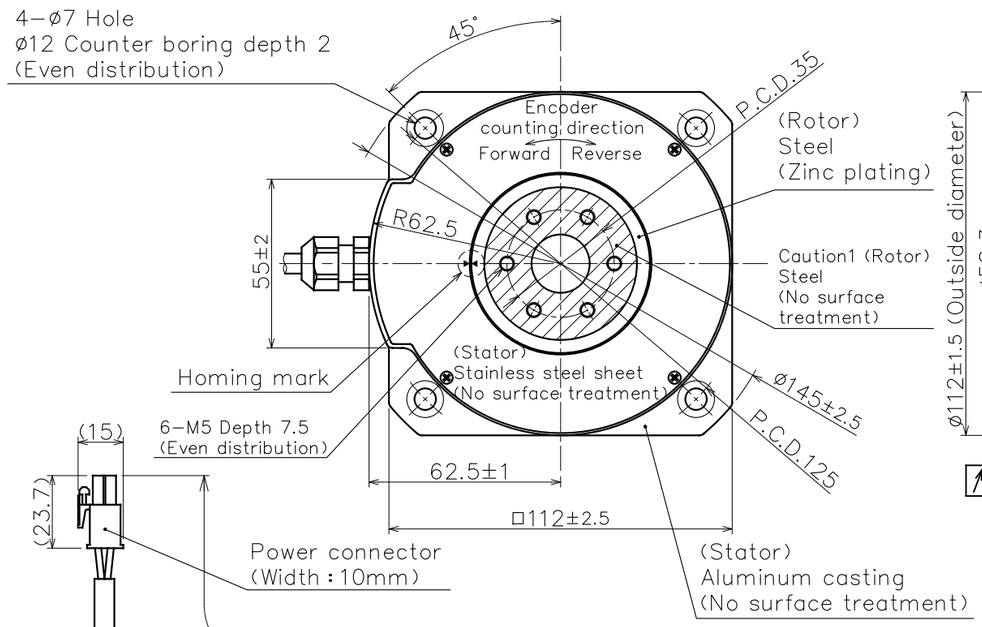

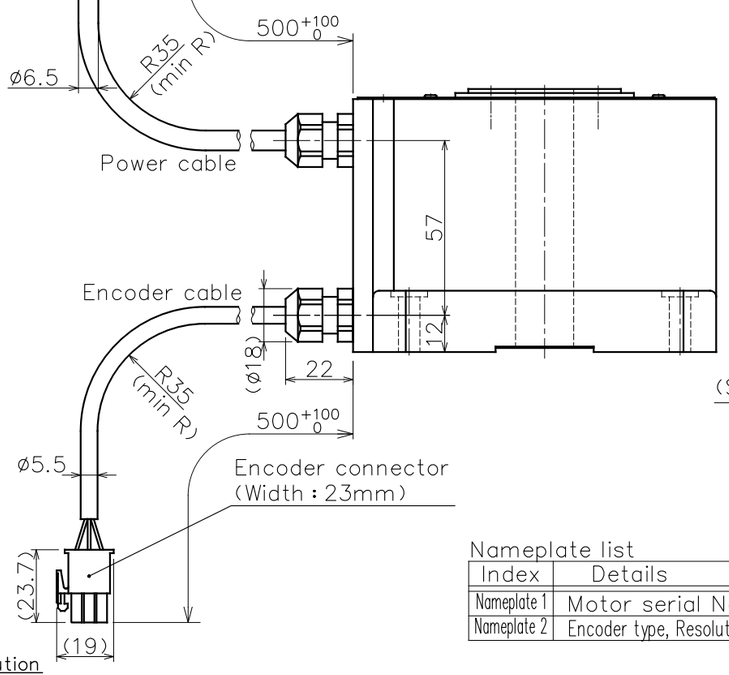

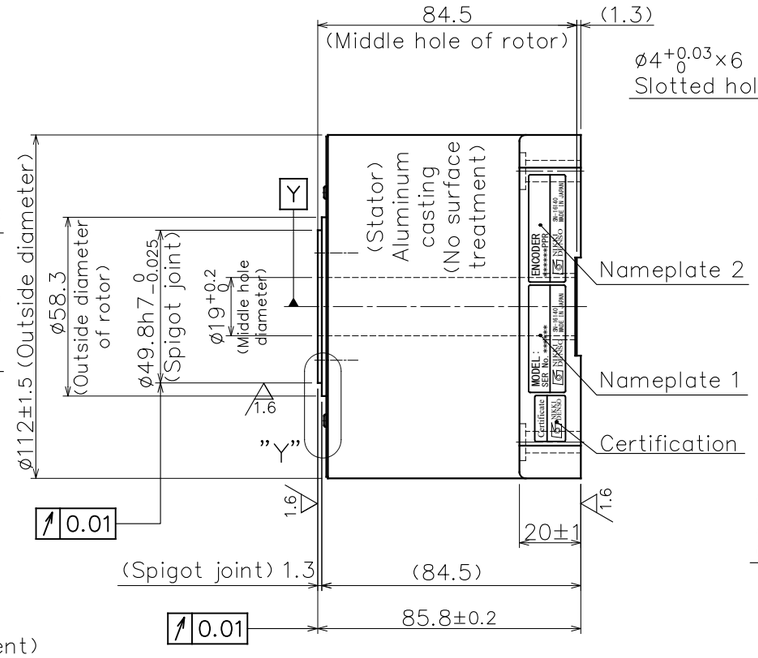

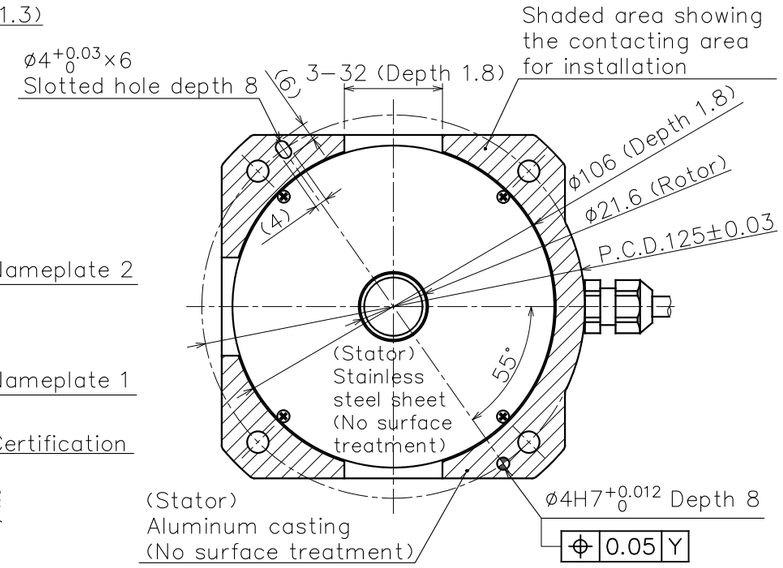

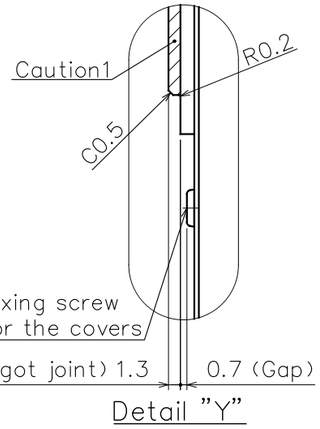

Power connector pin assignment

Pin	Phase	Line color
1	U	Red
2	V	White
3	W	Black
4	Ground	Green

Encoder connector pin assignment

Pin	Signal	Line color
1	A	Yellow/Red1
2	A*	Yellow/Black1
3	B	White/Red1
4	B*	White/Black1
5	Z	Gray/Red1
6	Z*	Gray/Black1
7	PS	Orange/Red1
8	PS*	Orange/Black1
9	PC	Gray/Red2
10	PC*	Gray/Black2
11	+5V	Pink/Red1
12	GND	Pink/Black1
13	+5V	Orange/Red2
14	GND	Orange/Black2
15	FG	Outer shield

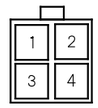

Power connector
Housing
172167−1 (TE)
Pin
170364−1 (TE)

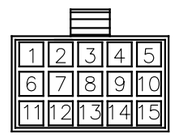

Encoder connector
Housing
172171−1 (TE)
Contact
170363−1 (TE)

Nameplate list

Index	Details
Nameplate 1	Motor serial No.
Nameplate 2	Encoder type, Resolution

Specifications

Items	Unit	Specifications		
Power Source	ACV	3-phase 200V AC		
Paired servo driver		400W	800W	(Caution3)
Rated torque	N·m	5.9	8.0	(Caution3)
Max torque	N·m	14.1	19.2	(Caution3)
Rated current	A	3.4	5.0	(Caution3)
Rated output	W	556	753	(Caution3)
Rated rotation speed	rps	15		
Encoder type	Optical incremental			
The signal output	Pulse out put of A phase and B phase			
Interpolation unit	Built−in motor			
Detection pulse	ppr	1,280,000		
Electrical detection resolution	arc second	1.02		
Allowable moment load	N·m	6.1		♦
Allowable axial load	N	1,100		♦
Radial runout (No load)	mm	0.01		
Axial runout (No load)	mm	0.01		
Rotor moment of inertia	kg·m²	0.00061		
Mass	kg	3.1		
Magnetic pole detection	※			
Duty type	−	Continuous (S1)		
Mounting attitude	Horizontal	(Rotor facing upward)		☆
Protection class	IP	42		
Operating temperature	℃	0~40		
Humidity (Non−condensing)	%	0~85		
Vibration resistance	G	1		
Withstand voltage	AC 1500V for 1 min only			
Insulation resistance	Ω	100M or higher		

※ Selection of Magnetic pole detection or Automatic pole detection
♦ The life of bearing and runout accuracy are different by load condition.
☆ Please make sure to consult with us if the mounting is other than horizontal attitude.

Caution
1.No surface treatment on the hatching area of rotating position (top surface and spigot joint)
Please remove the anticorrosive coating before using the motor.
2.Allowable axial load and allowable moment load indicated in the spec. sheet are the maximum allowable load when each load is independently activated.
Please make sure to consult us in case of combined load at the axial load, radial load, and moment load to be activated, or life of the motor.
3.If the rated torque of 8.0Nm (Max. torque 19.2Nm) output is required, please pair with the servo driver of 800W output.

Rev. mark Entry No.	Rev. note	Approved Date	Checked Date	Designed Date
△				
△				
△				

NOTE File name : SE−79070.dwg

Approved	Checked	Designed

NIKKI DENSO CKD NIKKI DENSO CO., LTD

Entry no. R1−7177 61
Product no. 247−8792
Surface treatment: Refer drawing
Material: Refer drawing
Scale: 1/2
Third angle projection
Model: τDISC motor ND110-85-FSP-HS (INC) NMR-SAUIA2A-551AP
Title: Dimensions (INC 15rps) High precision
Drawing No. SE−79070
REV.