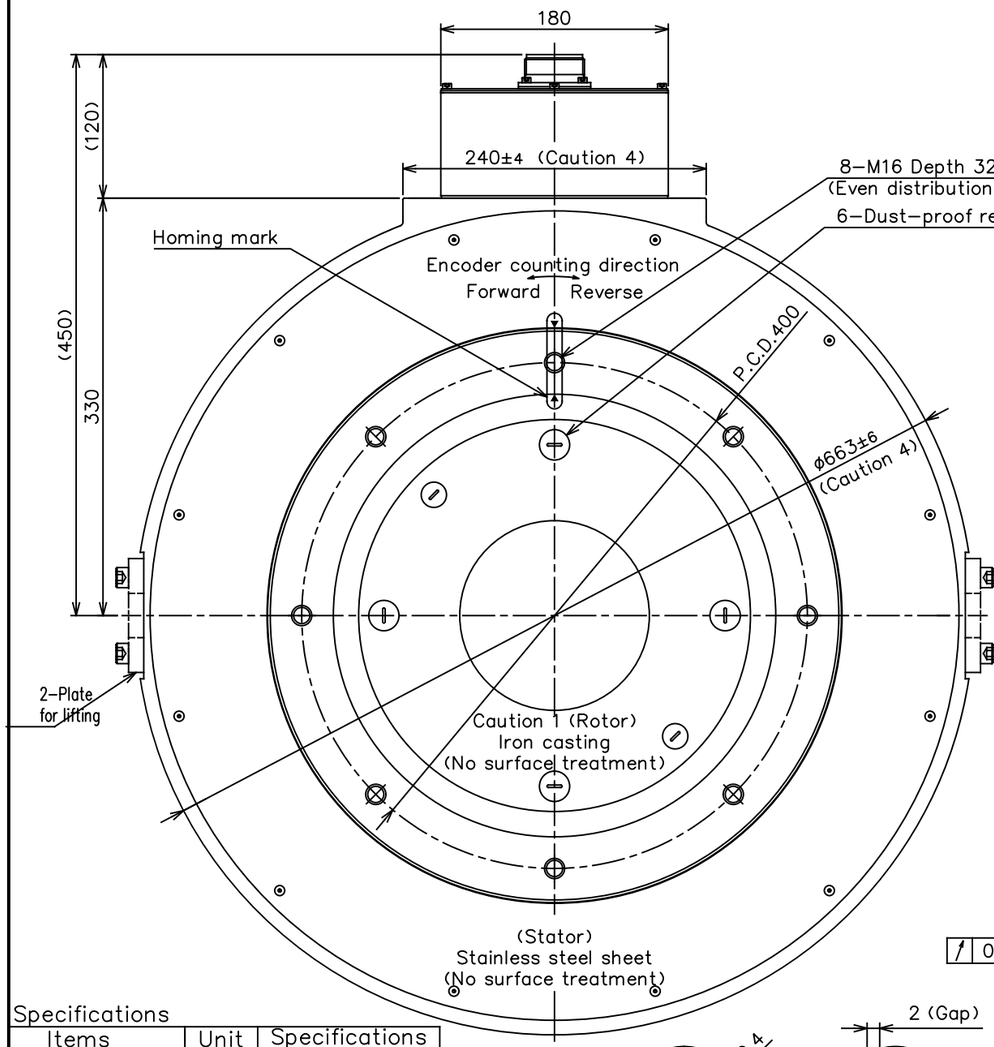

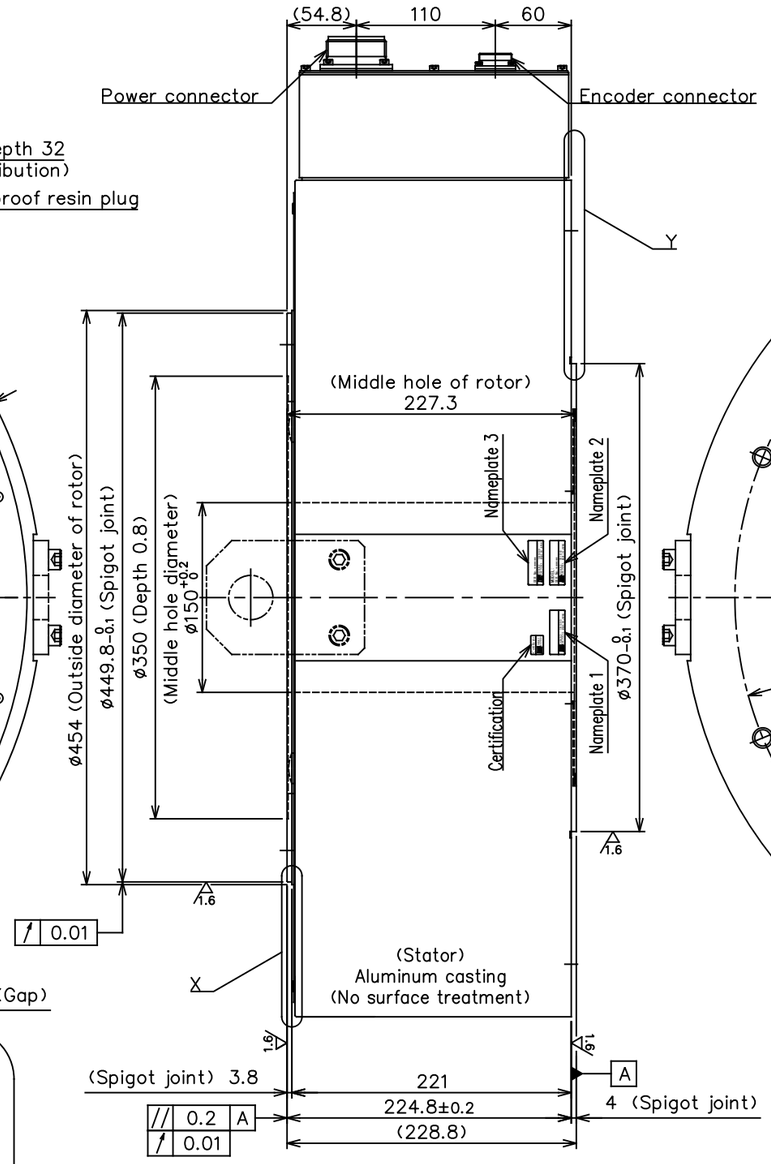

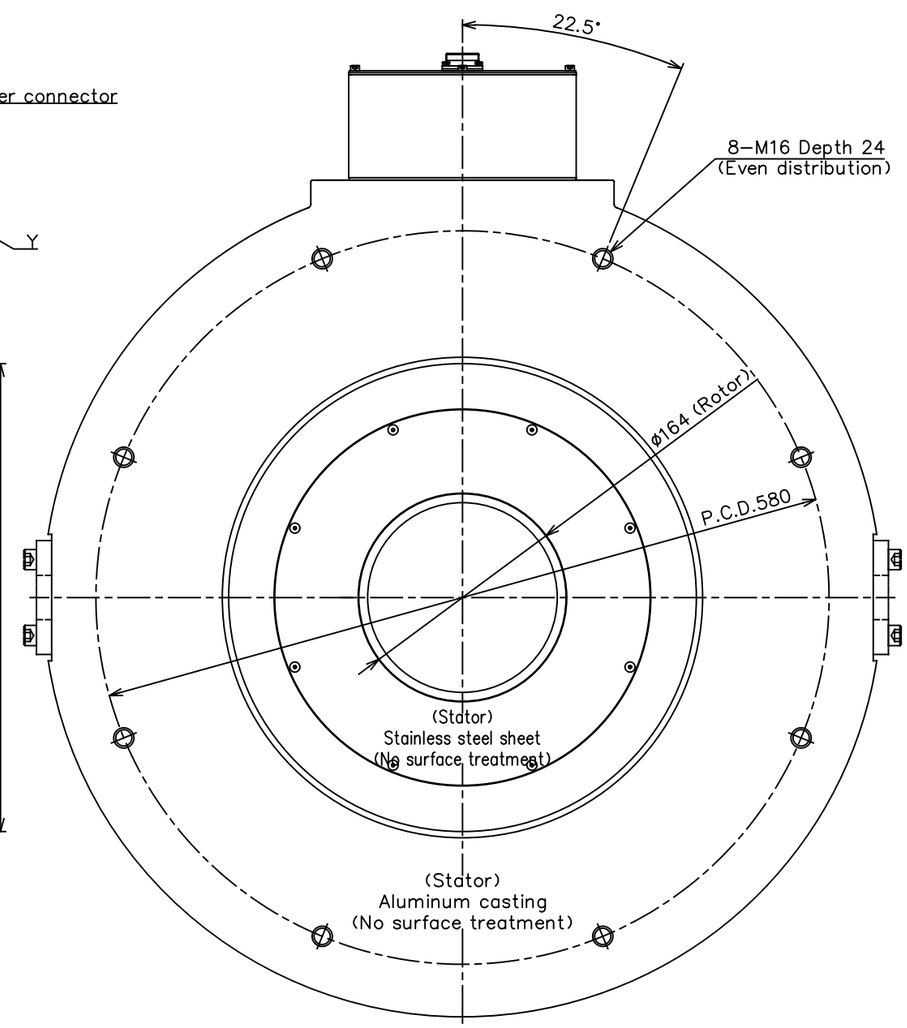

Specifications

Items	Unit	Specifications
Rated torque	N·m	2000
Max torque	N·m	3700
Rated current	A	62
Rated rotation speed	rps	1
Rated output	kW	12.6
Encoder type	−	Optical absolute (single−turn)
The signal output	−	Serial communication
Detection pulse	ppr	12,582,912
Electrical detection resolution	arcsec	0.103
Allowable moment load	N·m	7000 ♦
Allowable axial load	kN	100 ♦
Radial runout (No load)	mm	0.01
Axial runout (No load)	mm	0.01
Parallelism	mm	0.2
Absolute position accuracy	arcsec	±50 (OP:±10)
Repeat accuracy (Back and forth)	arcsec	±1
Rotor moment of inertia	kg·m²	5.2
Mass	kg	290
Magnetic pole detection	−	Absolute position detection
Power Source	ACV	3−phase 200V AC
Paired servo driver (VCII)	kW	15
Duty type	−	Continuous (S1)
Mounting attitude	Horizontal	(Rotor facing up and down direction) ☆
Protection class	IP	44
Operating temperature	℃	0~40
Humidity (Non−condensing)	%	85 or lower
Vibration resistance	G	1
Withstand voltage	AC 1500V for 1 min only	
Insulation resistance	Ω	100M or higher

♦ The life of bearing and runout accuracy are different by load condition.

☆ Please make sure to consult with us if the mounting is other than horizontal attitude.

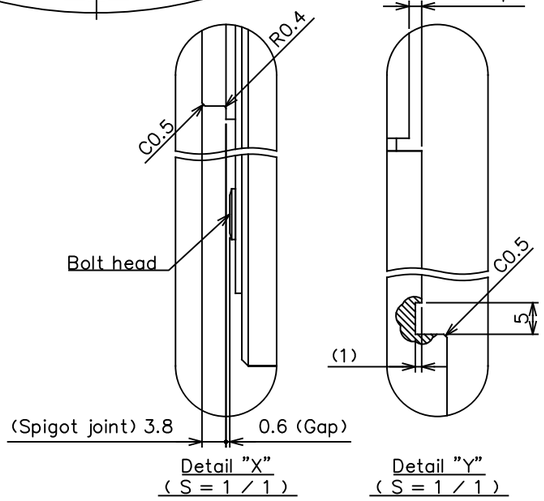

Power connector pin assignment

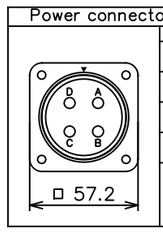

Pin	Signal	Line color
A	U	Red
B	V	White
C	W	Black
D	Ground	Green

DDK
D/MS3102A32−17P

Nameplate list

Index	Details
Nameplate1	Motor serial No.
Nameplate2	Encoder type, Resolution
Nameplate3	Encoder software

Encoder connector pin assignment

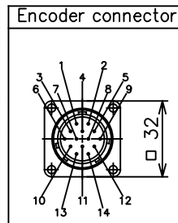

Pin	Signal	
1	+5V	
2	GND	
3	+5V	
4	GND	
5	N.C.	
6	SD1	
7	SD1*	
8	N.C.	
9	N.C.	
10	Reserved	Caution 3
11	Reserved	Caution 3
12	FG	
13	Reserved	Caution 3
14	Reserved	Caution 3

NMF-2414-RM (NANABOSHI ELECTERIC Mfg. Co., Ltd)

Caution

1. No surface treatment on the rotor.
   Please remove the anticorrosive coating before using the motor.
2. Allowable axial load and allowable moment load indicated in the spec. sheet are the maximum allowable load when each load is independently activated. Please make sure to consult us in case of combined load at the axial load, radial load, and moment load to be activated, or life of the motor.
3. Please do not wire the pin (10, 11, 13, 14) which is reserved for encoder manufacturer to avoid the encoder troubles.
4. Motor outer periphery is the casting surface, and certain irregularity may be found.

Rev. mark Entry no.	Rev. note	APPROVED DATE	CHECKED DATE	DESIGNED DATE

NOTE File name : SE−79690.dwg

Approved	Checked	Designed

NIKKI DENSO CKD NIKKI DENSO CO., LTD

Entry no. R1−7176 7
Surface treatment: Refer drawing
Material: Refer drawing
Scale 1 / 5
Third angle projection

Product no. 248−2960
Model: τDISC motor DD630−225−LSP10 (ABS) DD63−123L01CNN−P
Title: Dimensions (ABS) _High precision
Drawing no. SE−79690
REV.