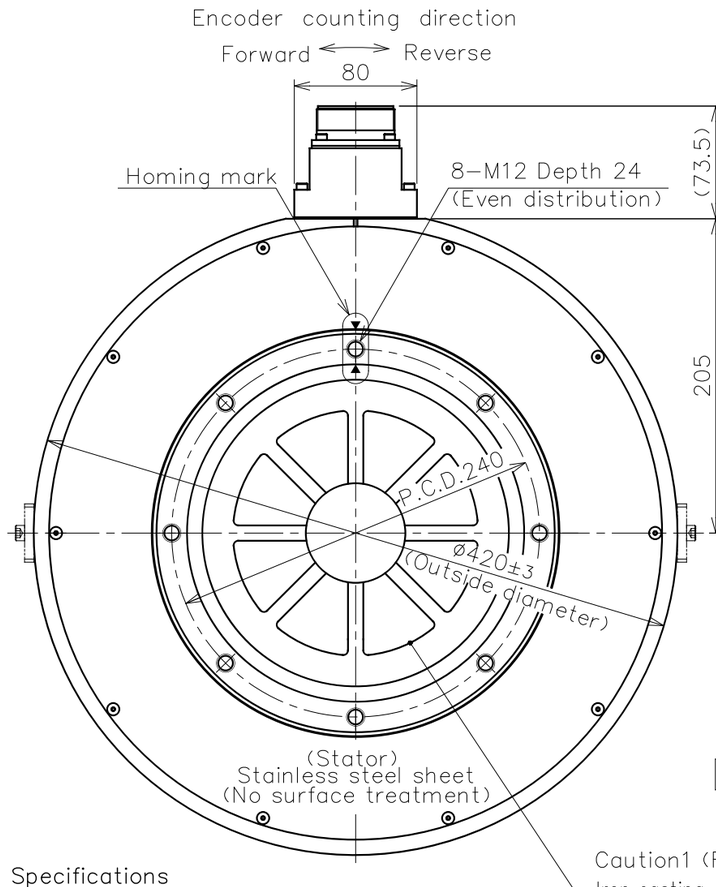

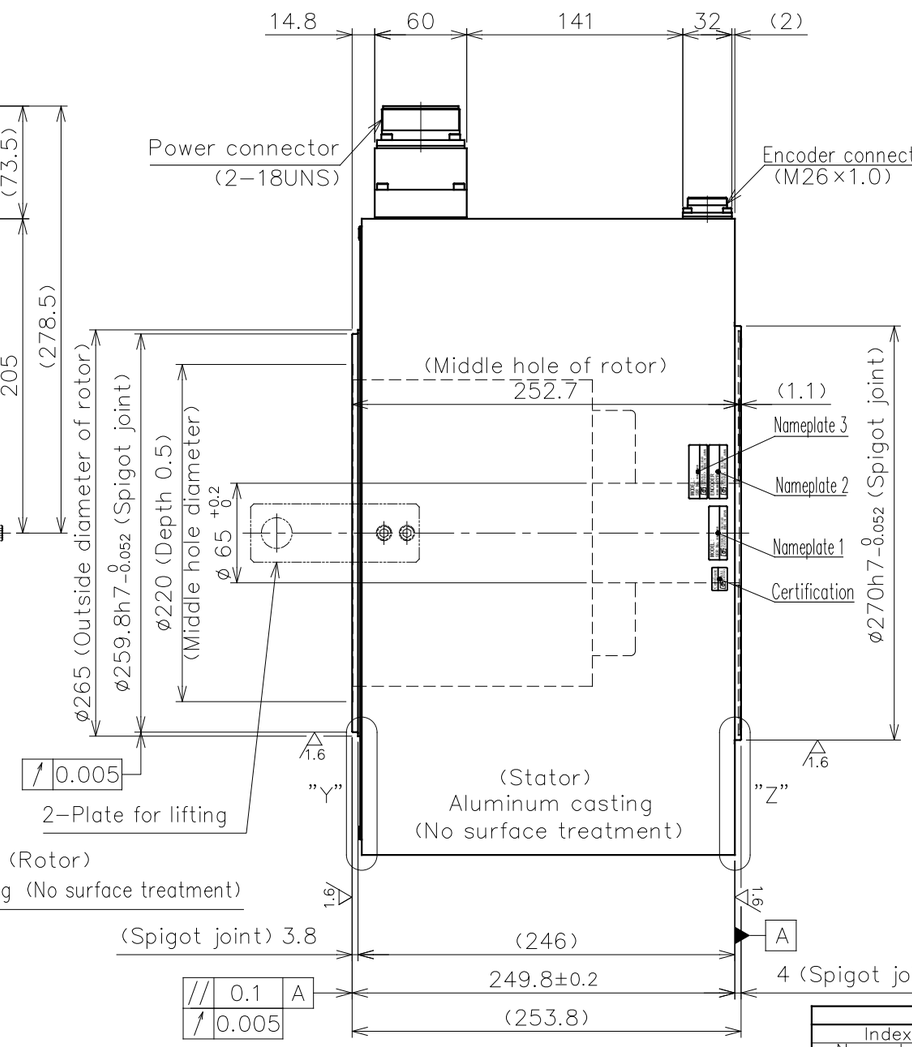

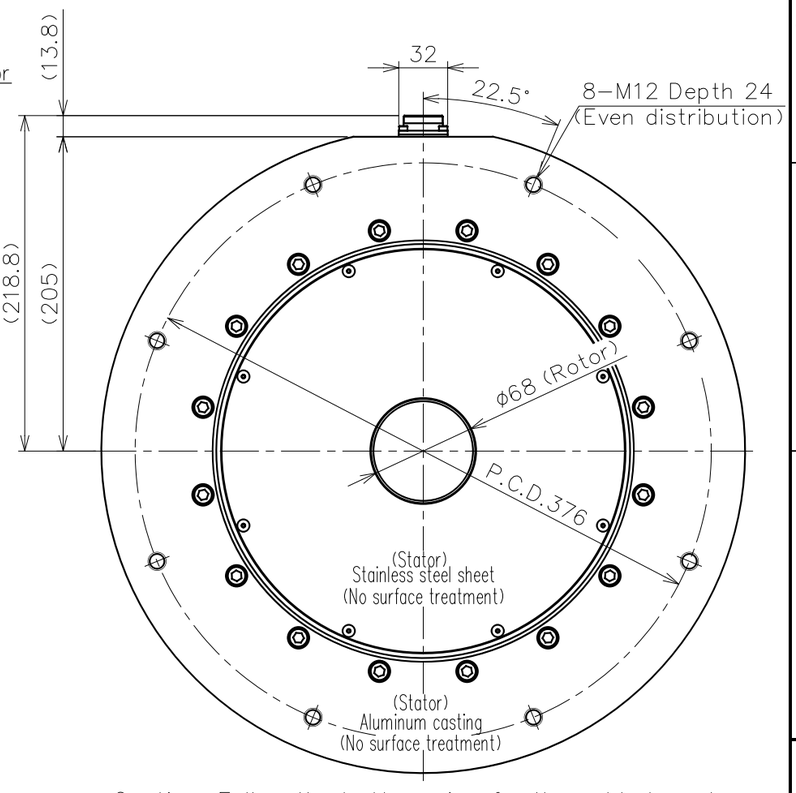

Caution : Follow the bottom view for the cable layout

Specifications

Items	Unit	Specifications
Rated torque	N·m	750
Max torque	N·m	1650
Rated current	A	51
Rated rotation speed	rps	2.0
Rated output	kW	9.4
Encoder type	—	Optical absolute (single-turn)
The signal output	—	Serial communication
Interpolation unit	—	Built−in motor
Detection pulse	ppr	6,815,744
Electrical detection resolution	arc second	0.191
Allowable moment load	N·m	3000 ♦
Allowable axial load	kN	55 ♦
Radial runout (No load)	mm	0.005
Axial runout (No load)	mm	0.005
Parallelism	mm	0.1
Absolute position accuracy	arc second	±50 (OP : ±10)
Repeat accuracy (Back and forth)	arc second	±1
Rotor moment of inertia	kg·m²	0.915
Mass	kg	140
Magnetic pole detection	—	Absolute position detection
Power Source	ACV	3−phase 200V AC
Paired servo driver (VCII)	kW	15
Duty type	—	Continuous (S1)
Mounting attitude	Horizontal	(Rotor facing up and down direction) ☆
Protection class	IP	44
Operating temperature	℃	0~40
Humidity (Non−condensing)	%	85 or lower
Vibration resistance	G	1
Withstand voltage	AC 1500V for 1 min only	
Insulation resistance	Ω	100M or higher

♦ The life of bearing and runout accuracy are different by load condition.
☆ Please make sure to consult with us if the mounting is other than horizontal attitude.

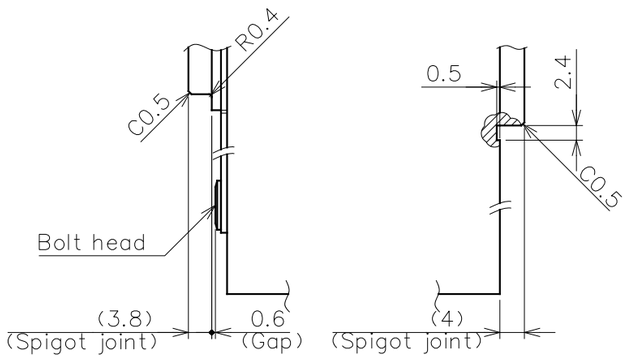

Nameplate list	
Index	Details
Nameplate1	Motor serial No.
Nameplate2	Encoder type, Resolution
Nameplate3	Encoder software

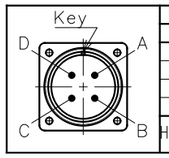

Power connector pin assignment		
Pin	Signal	Line color
A	U	Red
B	V	White
C	W	Black
D	Ground	Green

Housing : D/MS3102A32−17P (DDK)

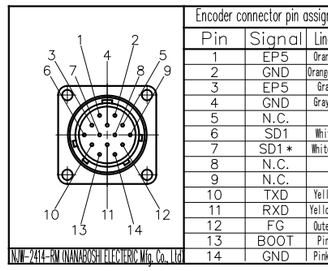

Encoder connector pin assignment			
Pin	Signal	Line color	
1	EP5	Orange/Red1	
2	GND	Orange/Black 1	
3	EP5	Gray/Red1	
4	GND	Gray/Black1	
5	N.C.	—	
6	SD1	White/Red1	
7	SD1 *	White/Black1	
8	N.C.	—	
9	N.C.	—	
10	TXD	Yellow/Red1	Caution3 Reserved
11	RXD	Yellow/Black1	Caution3 Reserved
12	FG	Outer shield	
13	BOOT	Pink/Red1	Caution3 Reserved
14	GND	Pink/Black1	Caution3 Reserved

Caution

1.No surface treatment on the rotor.Please remove the anticorrosive coating before using the motor.
2.Allowable axial load and allowable moment load indicated inthe spec. sheet are the maximum allowable load when each loadis independently activated. Please make sure to consult us in case of combined load at the axial load, radial load, and momentload to be activated, or life of the motor.
3.Please do not wire the pin (10,11,13,14) which is reserved for encoder manufacturer to avoid the encoder troubles.
4.Applicable motor power cable : PNS cable NCR−XBBVA−**0 (254−3500~3550)
5.Applicable encoder cable : ERA cable NCR−XBGFB−**0 (255−3740~3760, 256−1900~1960)
6.Motor outer periphery is the casting surface, and certain irregularity may be found.

Rev mark	Rev.note	APPROVED DATE	CHECKED DATE	DESIGNED DATE
Entry no.				

NOTE File name : SE−79650.dwg

Approved	Checked	Designed

NIKKI DENSO CKD NIKKI DENSO CO., LTD

Entry no. R1−7176 7
Surface treatment: Refer drawing
Material: Refer drawing
Scale: 1 / 4
Third angle projection

Product no. 248−0320
Model: DISC motor DD400−250−LSP5 (2rps ABS) DD40−9421L02CNN−P
Title: Dimensions (ABS) High precision
Drawing No. SE−79650
REV.