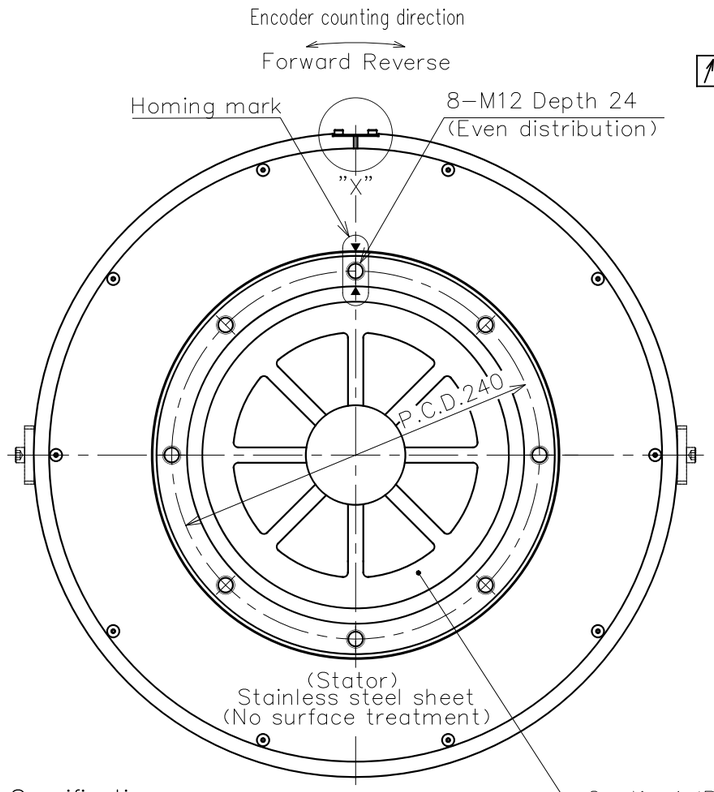

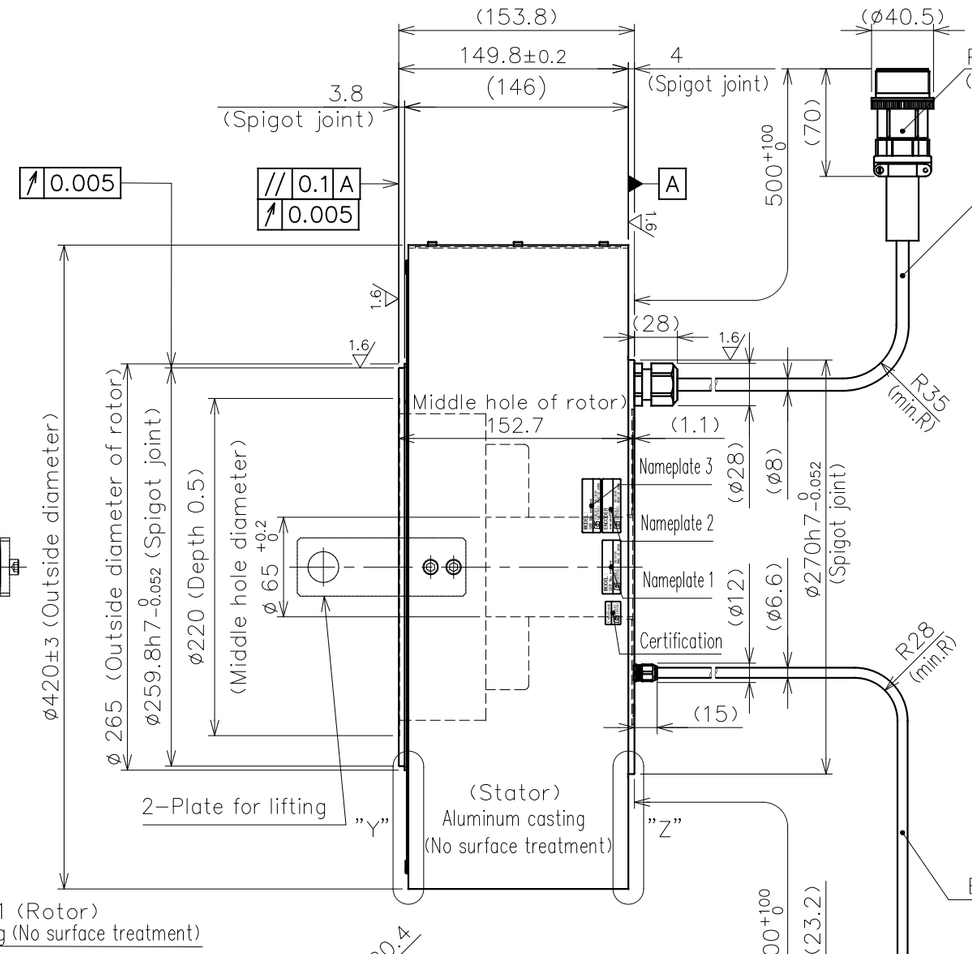

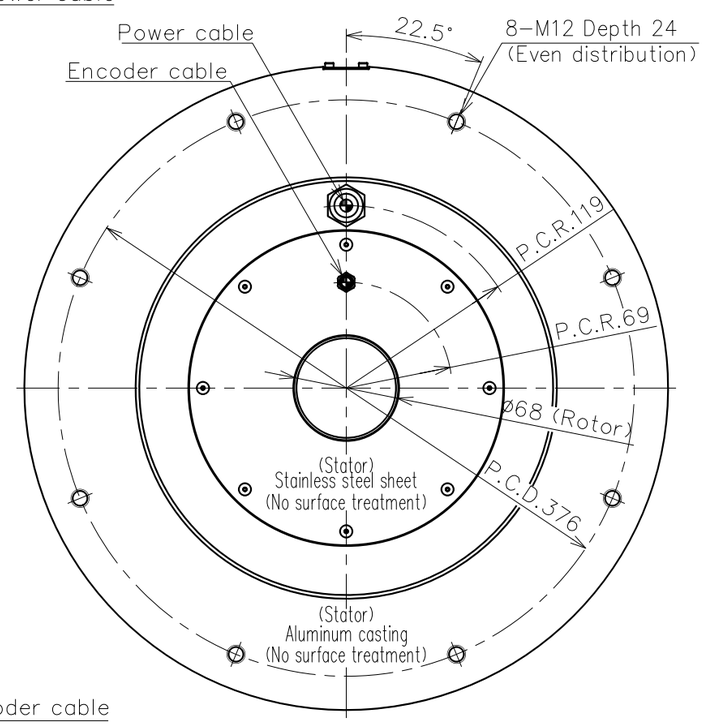

Caution : Follow the bottom view for the cable layout

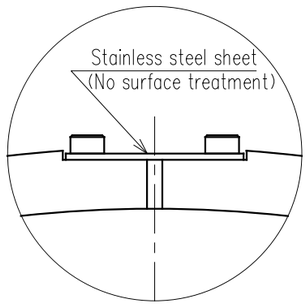

Detail "X"
(S = 1 / 1)

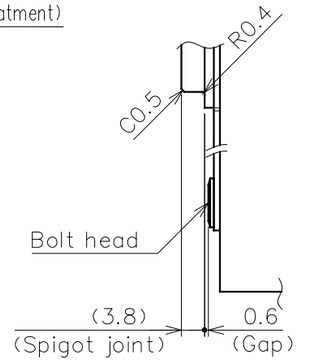

Detail "Y"
(S = 1 / 1)

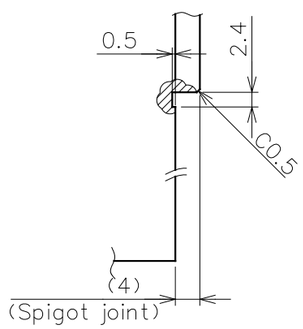

Detail "Z"
(S = 1 / 1)

Specifications

Items	Unit	Specifications
Rated torque	N·m	260
Max torque	N·m	650
Rated current	A	24
Rated rotation speed	rps	2
Rated output	kW	3.267
Encoder type	—	Optical absolute (single−turn)
The signal output	—	Serial communication
Interpolation unit	—	Built−in motor
Detection pulse	ppr	6,815,744
Electrical detection resolution	arc second	0.191
Allowable moment load	N·m	2000 ♦
Allowable axial load	kN	44 ♦
Radial runout (No load)	mm	0.005
Axial runout (No load)	mm	0.005
Parallelism	mm	0.1
Absolute position accuracy	arc second	±50 (OP : ±10)
Repeat accuracy (Back and forth)	arc second	±1
Rotor moment of inertia	kg·m²	0.402
Mass	kg	76
Magnetic pole detection	—	Absolute position detection
Power Source	ACV	3−phase 200V AC
Paired servo driver (VCII)	kW	4
Duty type	—	Continuous (S1)
Mounting attitude	Horizontal	(Rotor facing up and down direction) ☆
Protection class	IP	44
Operating temperature	℃	0~40
Humidity (Non−condensing)	%	85 or lower
Vibration resistance	G	1
Withstand voltage	AC 1500V for 1 min only	
Insulation resistance	Ω	100M or higher

♦ The life of bearing and runout accuracy are different by load condition.
☆ Please make sure to consult with us if the mounting is other than horizontal attitude.

Caution
1.No surface treatment on the rotor.Please remove the anticorrosive coating before using the motor.
2.Allowable axial load and allowable moment load indicated inthe spec. sheet are the maximum allowable load when each loadis independently activated. Please make sure to consult us in case of combined load at the axial load, radial load, and momentload to be activated, or life of the motor.
3.Please do not wire the pin (A6~B7) which is reserved for encoder manufacturer to avoid the encoder troubles.
4.Pass thru hole must be ø50 or larger.
5.Motor outer periphery is the casting surface, and certain irregularity may be found.

Nameplate list	
Index	Details
Nameplate1	Motor serial No.
Nameplate2	Encoder type, Resolution
Nameplate3	Encoder software

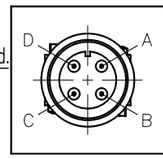

Power connector pin assignment		
Pin	Signal	Line color
A	U	Red
B	V	White
C	W	Black
D	Ground	Green

Adapter : N/MS3101B22−22P (JAE)
Clamp : N/MS3057−12A (JAE)

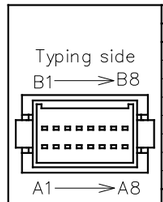

Encoder connector pin assignment				
Pin	Signal	Pin	Signal	
A1	+5V	A5	N.C.	
B1	GND	B5	N.C.	
A2	+5V	A6	Reserved	Caution3
B2	GND	B6	Reserved	Caution3
A3	SD1	A7	Reserved	Caution3
B3	SD1*	B7	Reserved	Caution3
A4	N.C.	A8	N.C.	
B4	N.C.	B8	FG	

Housing : J21DPM−16V−KY (JST)
Contact : SJ2M−002GF−M1.0N (JST)

Rev mark Entry no.	Rev.note	APPROVED DATE	CHECKED DATE	DESIGNED DATE

NOTE File name : SE−79570.dwg

Approved	Checked	Designed

NIKKI DENSO CKD NIKKI DENSO CO., LTD

Entry no. R1−7176,7
Surface treatment: Refer drawing
Material: Refer drawing
Scale: 1 / 4
Third angle projection

Product no. 248−0240
Model: DISC motor DD400−150−LSP5 (ABS) DD40−322L02CNN−P
Title: Dimensions (ABS) High precision
Drawing No. SE−79570
REV.