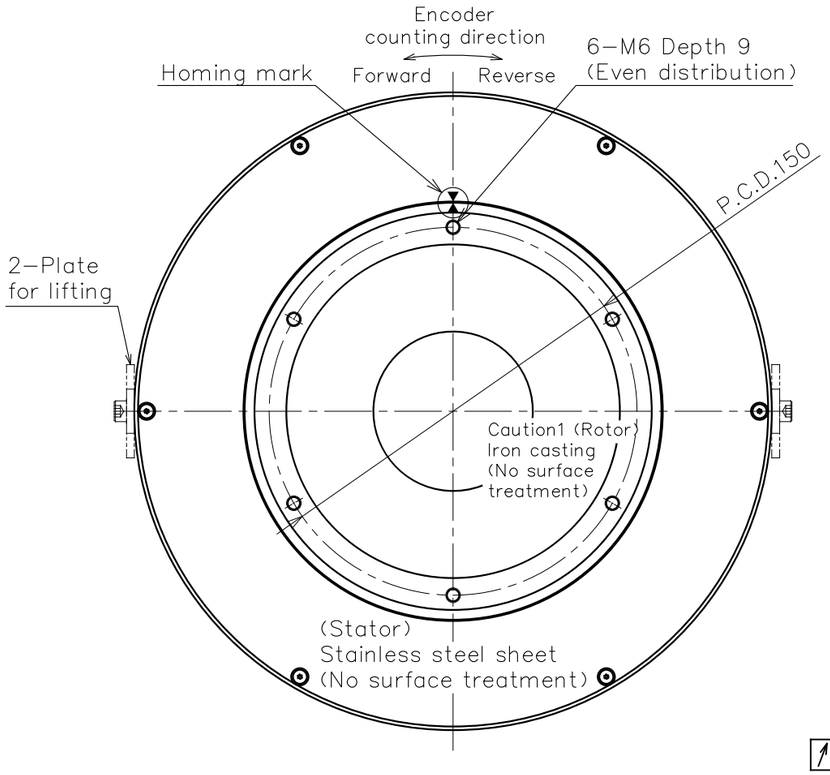

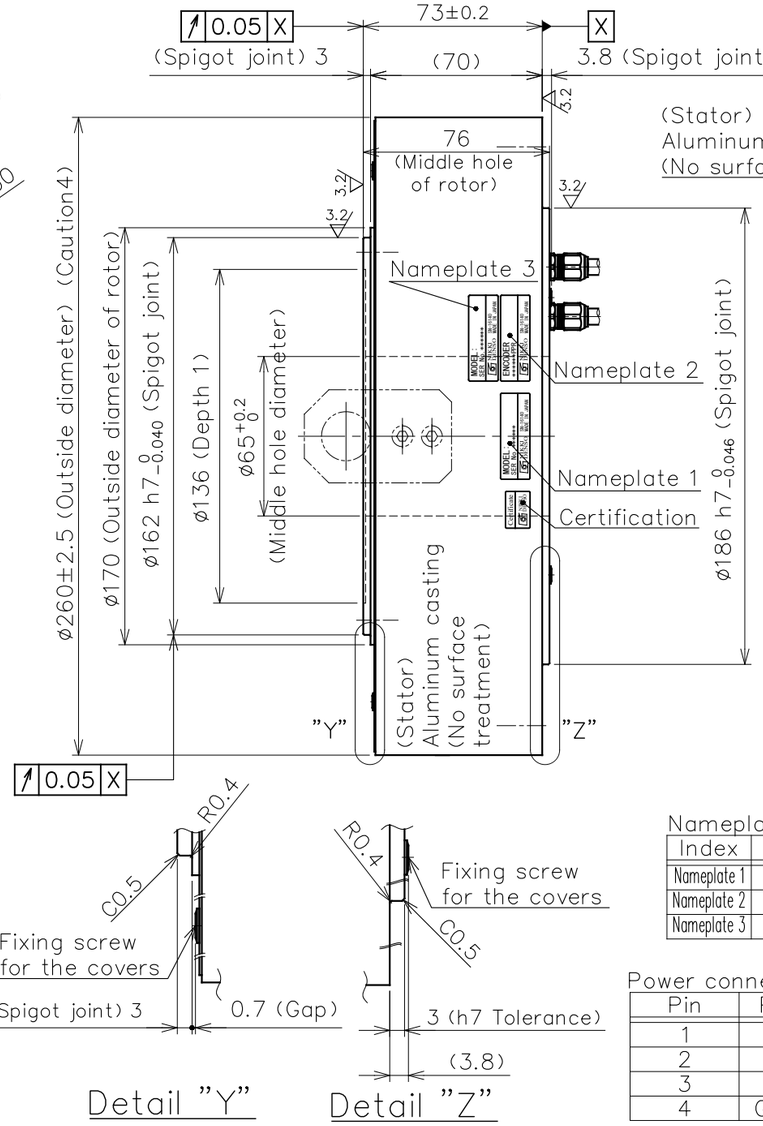

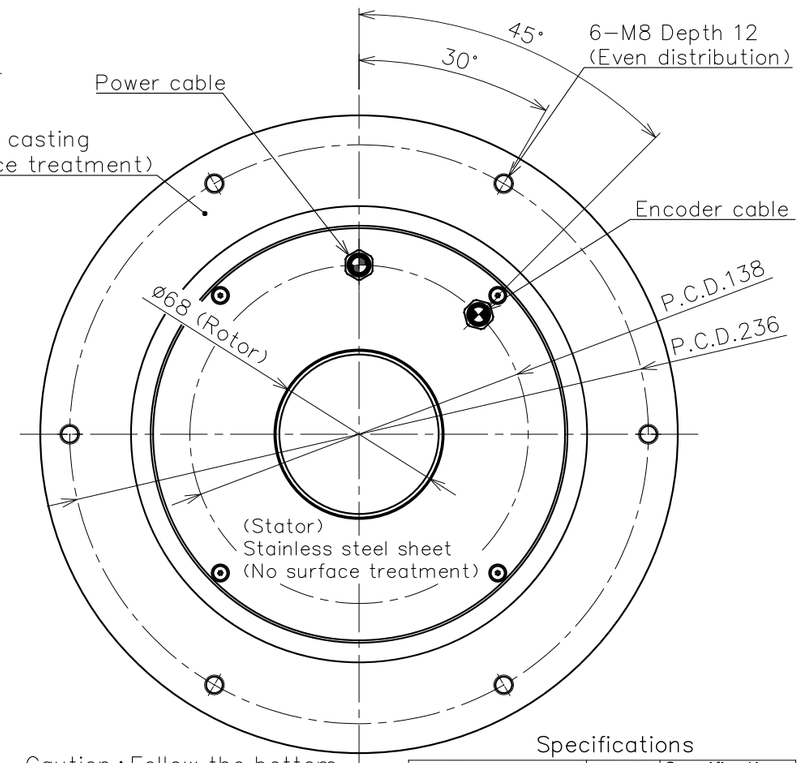

Caution : Follow the bottom view for the cable layout

Nameplate list

Index	Details
Nameplate 1	Motor serial No.
Nameplate 2	Encoder type, Resolution
Nameplate 3	Encoder software

Power connector pin assignment

Pin	Phase	Line color
1	U	Red
2	V	White
3	W	Black
4	Ground	Green

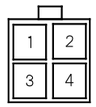

Power connector
Housing
172167−1 (TE)
Pin
170364−1 (TE)

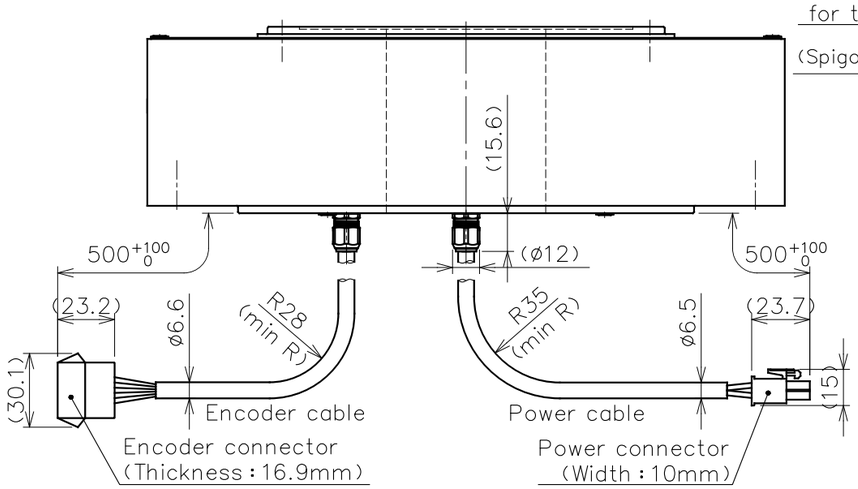

Encoder connector pin assignment

Pin	Signal	Pin	Signal	
A1	EP5	A5	N.C.	
B1	GND	B5	N.C.	
A2	EP5	A6	Reserved	(Caution3)
B2	GND	B6	Reserved	(Caution3)
A3	SD1	A7	Reserved	(Caution3)
B3	SD1*	B7	Reserved	(Caution3)
A4	N.C.	A8	N.C.	
B4	N.C.	B8	FG	

Un−used PINS : A4, A5, A8, B4 and B5

Typing side

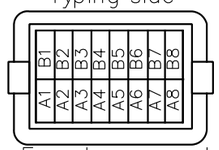

Encoder connector
Housing (JST)
J21DPM−16V−KY
Contact (JST)
SJ2M−002GF−M1.0N

Specifications

Items	Unit	Specifications	
Rated torque	N·m	42	
Max torque	N·m	100	
Rated current	A	6.0	
Rated rotation speed	rps	3	
Rated output	W	791	
Encoder type	Optical absolute (single-turn)		
The signal output	Serial communication		
Interpolation unit	Built−in motor		
Detection pulse	ppr	6,815,744	
Electrical detection resolution	arc second	0.191	
Allowable moment load	N·m	244	♦
Allowable axial load	N	12,900	♦
Radial runout (No load)	mm	0.05	
Axial runout (No load)	mm	0.05	
Rotor moment of inertia	kg·m²	0.023	
Mass	kg	12.5	
Magnetic pole detection	Absolute position detection		
Power Source	ACV	3-phase 200V AC	
Paired servo driver	800W		
Duty type	−	Continuous (S1)	
Mounting attitude	Horizontal	(Rotor facing upward)	☆
Protection class	IP	42	
Operating temperature	℃	0~40	
Humidity (Non-condensing)	%	0~85	
Vibration resistance	G	1	
Withstand voltage	AC 1500V for 1 min only		
Insulation resistance	Ω	100M or higher	

♦ The life of bearing and runout accuracy are different by load condition.
☆ Please make sure to consult with us if the mounting is other than horizontal attitude.

Caution
1.No surface treatment on the rotor.
Please remove the anticorrosive coating before using the motor.
2.Allowable axial load and allowable moment load indicated in the spec. sheet are the maximum allowable load when each load is independently activated.
Please make sure to consult us in case of combined load at the axial load, radial load, and moment load to be activated, or life of the motor.
3.Please do not wire the pin (A6~B7) which is reserved for encoder manufacturer to avoid the encoder troubles.
4.Motor outer periphery is the casting surface, and certain irregularity may be found.

Rev. mark Entry No.	Rev. note	Approved Date	Checked Date	Designed Date

NOTE File name : SE−79320.dwg

Approved	Checked	Designed

NIKKI DENSO CKD NIKKI DENSO CO., LTD

Entry no. R1−7177644
Surface treatment: Refer drawing
Material: Refer drawing
Scale: 1/2.5
Third angle projection

Product no. 247−9160
Model: τDISC motor ND250−70−LS (ABS) NMR−STEJA2A−791A
Title: Dimensions (ABS)
Drawing No. SE−79320
REV.