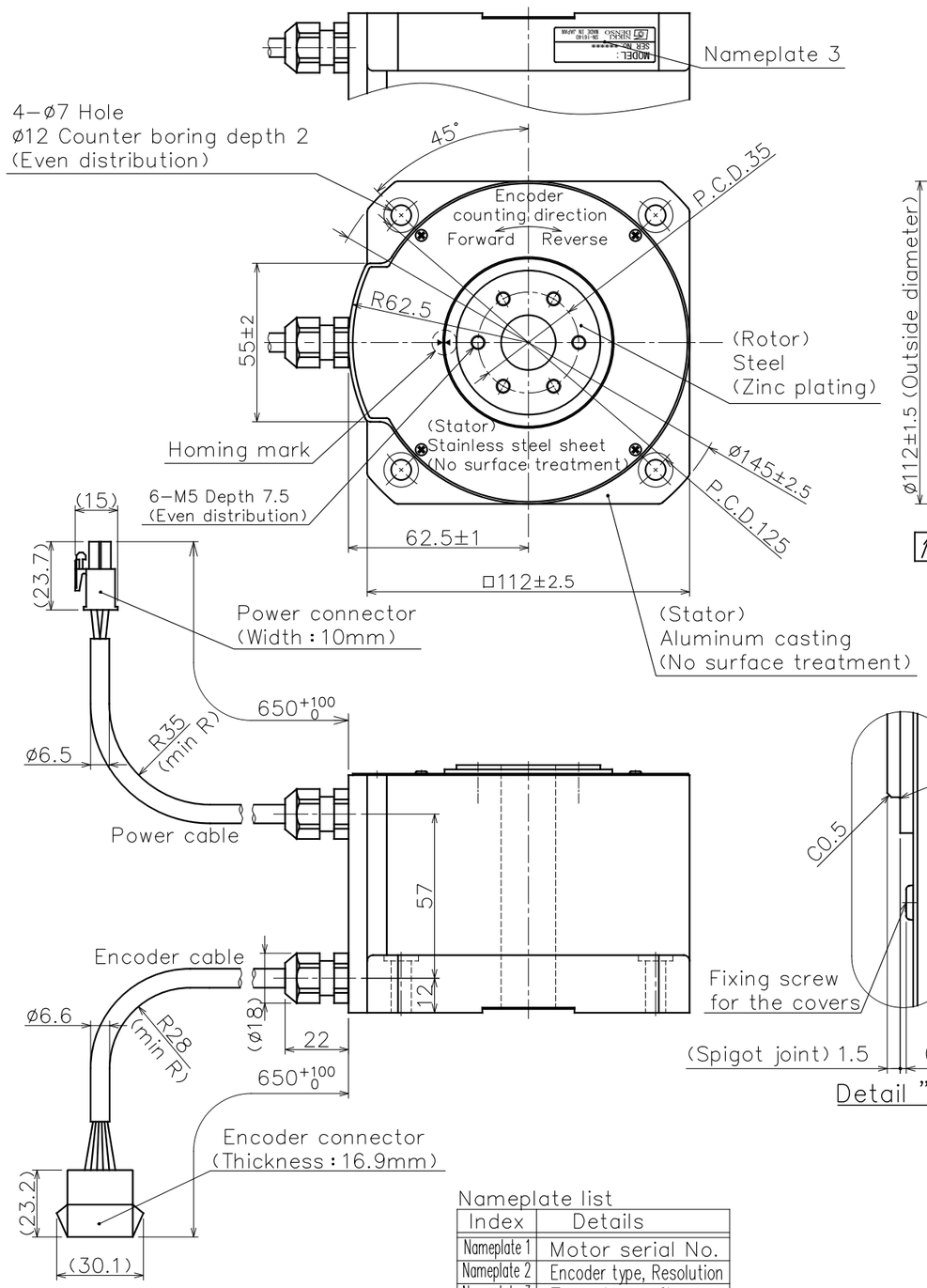

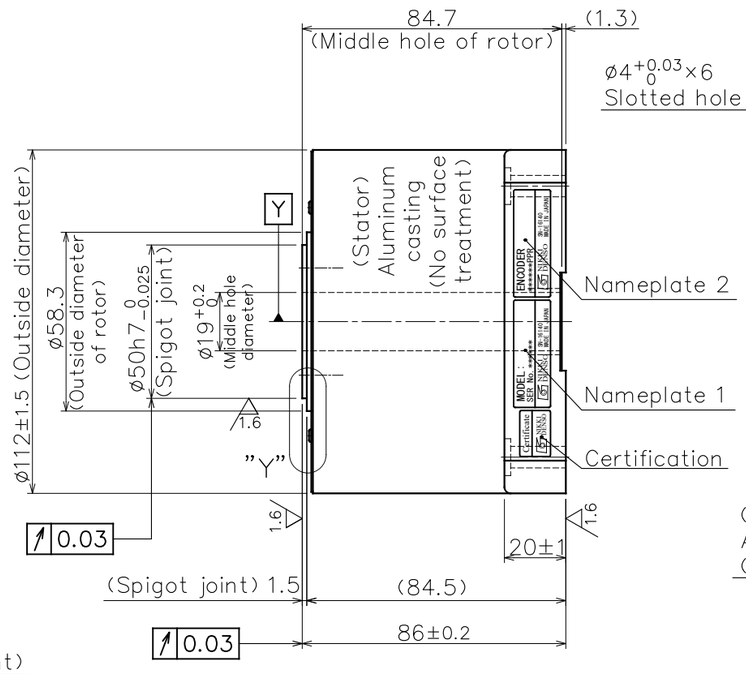

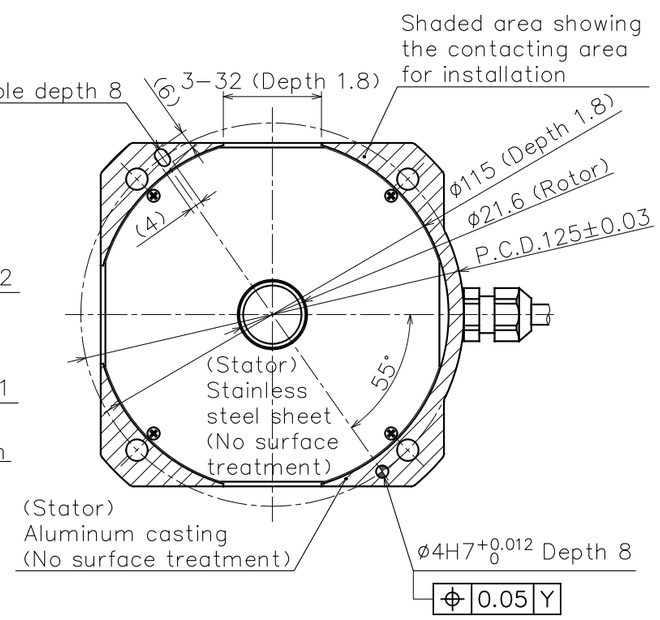

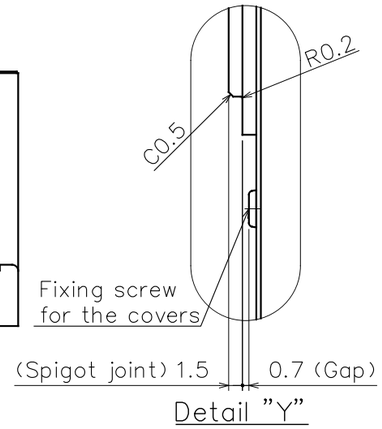

Power connector pin assignment

Pin	Phase	Line color
1	U	Red
2	V	White
3	W	Black
4	Ground	Green

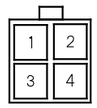

Power connector
Housing
172167−1 (TE)
Pin
170364−1 (TE)

Typing side

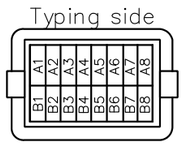

Encoder connector
Housing (JST)
J21DPM−16V−KY
Contact (JST)
SJ2M−002GF−M1.0N

Encoder connector pin assignment

Pin	Signal	Pin	Signal	
A1	EP5	A5	N.C.	
B1	GND	B5	N.C.	
A2	EP5	A6	Reserved	(Caution2)
B2	GND	B6	Reserved	(Caution2)
A3	SD1	A7	Reserved	(Caution2)
B3	SD1※	B7	Reserved	(Caution2)
A4	N.C.	A8	N.C.	
B4	N.C.	B8	FG	

Un−used PINS : A4, A5, A8, B4 and B5

Nameplate list

Index	Details
Nameplate 1	Motor serial No.
Nameplate 2	Encoder type, Resolution
Nameplate 3	Encoder software

Specifications

Items	Unit	Specifications	
Rated torque	N·m	5.9	
Max torque	N·m	14.7	
Rated current	A	3.4	
Rated rotation speed	rps	5	
Rated output	W	185	
Encoder type	Optical absolute (single−turn)		
The signal output	Serial communication		
Interpolation unit	Built−in motor		
Detection pulse	ppr	2,097,152	
Electrical detection resolution	arc second	0.618	
Allowable moment load	N·m	6.1	♦
Allowable axial load	N	1,100	♦
Radial runout (No load)	mm	0.03	
Axial runout (No load)	mm	0.03	
Rotor moment of inertia	kg·m²	0.00061	
Mass	kg	3.1	
Magnetic pole detection	Absolute position detection		
Power Source	ACV	Single Phase 100V	
Paired servo driver	200W		
Duty type	−	Continuous (S1)	
Mounting attitude	Horizontal	(Rotor facing upward)	☆
Protection class	IP	42	
Operating temperature	℃	0~40	
Humidity (Non−condensing)	%	0~85	
Vibration resistance	G	1	
Withstand voltage	AC 1500V for 1 min only		
Insulation resistance	Ω	100M or higher	

♦ The life of bearing and runout accuracy are different by load condition.
☆ Please make sure to consult with us if the mounting is other than horizontal attitude.

Caution
1.Allowable axial load and allowable moment load indicated in the spec. sheet are the maximum allowable load when each load is independently activated.
Please make sure to consult us in case of combined load at the axial load, radial load, and moment load to be activated, or life of the motor.
2.Please do not wire the pin (A6~B7) which is reserved for encoder manufacturer to avoid the encoder troubles.

Rev. mark	Rev. note	Approved Date	Checked Date	Designed Date
Entry No.				

NOTE File name : SE−79100.dwg

Approved	Checked	Designed

NIKKI DENSO CKD NIKKI DENSO CO., LTD

Entry no. R1−7167−1
Surface treatment: Refer drawing
Material: Refer drawing
Scale 1/2
Third angle projection
Product no. 247−9091
Model: τDISC motor ND110−85−FS (ABS 100V) NMR−SAUJA1A−181A
Title: Dimensions (ABS 100V)
Drawing No. SE−7910 0
REV.